IMPCO TECHNOLOGIES, INC.

Master Parts Catalog

Includes all saleable parts as of April, 2012 for Industrial Engine applications
(Excludes: some Spectrum Series applications covered by manufacturer specific Manuals and the line of automotive applications).

IMPCO Technologies is located at:

IMPCO Technologies, Inc.
3030 South Susan St.
Santa Ana, CA 92704
(714) 656-1200
salesadmin@impcotechnologies.com
www.impcotechnologies.com

IMPCO Technologies, Inc. is a subsidiary of Fuel Systems Solutions, Inc. and traded as FSYS

IMC April, 2012

Table of Contents

Introduction 5
IMPCO Offices 6
IMPCO Distributors 8
Warranty 10
Standard LPG Fuel system Engine Maintenance Schedule 11
Safety 12
Carburetion Theory and Operation 14
UL Listings 15
Carburetors & Mixers 19
- Model 55 20
- Model 55-250L 24
- Model 55-500L 28
- Model 55-750L 32
- Model 60 (IMPCO) 38
- Model 100 42
- Model 110 48
- Model 125 52
- Model 125M-10 58
- Model 200 62
- Model 200D 68
- Model 200T 72
- Model 210 76
- Model 225 80
- Model 300A 86
- Model 400VF 92
- Model 425 98
- Model 600 104
- Model 600D 108
- Model 600VF 114
- Model 600DVF 120

Fuel Metering 125
- Carburetor Adapters 126
- Venturis 132
- Choice Fuel Custom Fuel Outlet Fittings 137
- 130 Series Load Blocks 138
- Elbow, Power Adjustment 139
- 100 Series Fuel Tubes 140
- 2F Series Spud In Tubes 141
- Commander Oz Air/Fuel Control Unit 142
- Fuel Control Parts 144
- In Line Power Valves 145
- FCV Solenoid Kit 146

Table of Contents

Fuel Metering (continued)
- Vacuum Switches 147
- Regulator Control Valve 149

Regulators 151
- Model AHR50-D 152
- 11A17 154
- Model T52 158
- Model KN 160
- Model 202A 164
- Model T60 166
- Model J 170
- Model PJ 174
- Cobra 178
- P-Cobra 182
- Model C250A 186
- Model 120A 190
- Model L 194
- Model E & PE 198
- Model EV & PEV 204
- HPR-3600 210
- IMP Model 212

Fuel Shut Off/Lockoffs 215
- Model VFF30 216
- ET98 Model 220
- ET98 With Filter Model 224
- FL-206 Model 228
- FL-218-12V Model 230
- FL-221 Model 234
- L-418-12V Model 236
- FL-50046 Model 238
- FL-306 Model 242
- FL-51767 Model 244

Adapters 247

GFI Components 256
- P1 Series Regulators 256
- P2 Series Regulators 258
- CNG Solenoid 260
- Fuel Rails 261
- Fuel Injectors 263
- Vaporizors 266

© IMPCO TECHNOLOGIES, INC.

Table of Contents

Heavy Duty Vaporizors 268
Metering Valves 270
Filters 271
Isolation Valves 272
Pressure Relief Devices 276
Accessories 277
Repair Kits 278
Levers 279
Brackets 283
Oxygen Sensor 284
Air Filters 285
Fuel Filters 286
Tools & Test Equipment 288
Engine Kits & Modules 289
Turbocharger Pressure Control Valve 292
Quick Connect Fittings 293
Fitting, Ball Check 294
Needle Bearings 295
Filter Repair Kit 296
Relay & Bracket 297
ADP Assemblies 298
Fittings & Hoses 299
Port Fittings & Hardware 300
Spectrum Series II (2004-2006) 307
2.0-2.4L Mitsubishi Engine Lift Trucks 308
3.0L LPG Lift Trucks 330
3.0L Gasoline Lift Trucks 354
4.3L LPG Lift Trucks 372
4.3L Gasoline Lift Trucks 406
4.3L Dual Fuel Lift Trucks 430
Spectrum Series III (2007-2008) 465
4.3L Toyota Lift Trucks 460
4.3L MCFA Lift Trucks 516
NMHG 2.0 & 2.2L Lift Trucks 550
4.3L Generic Lift Trucks 570
3.0L Generic Lift Trucks 600
Definitions 621

INTRODUCTION

This IMPCO Master Catalog lists saleable parts for small engine, material handling, automotive and large engine applications sold under the brand names IMPCO, Beam, Garretson and Algas with the following exceptions:

- Spectrum Series these systems are covered in specific OEM Service and Parts Catalogs.
- Sequent system these automotive systems will be covered in separate publications

Note: Additional information on the 600 Varifuel carburetors can be found in IMPCO!s Large Engine Catalog

The catalog is broken into six major sections covering Carburetors/Mixers, Fuel Metering, Regulators, Shut-Off/Lockoff Valves, Adapters and Accessories. The brand of most components (IMPCO, Beam, Garretson and Algas) is shown on the page headers. Items listed as "NSS#(Not Serviced Separately) are no longer available, not available separately or are only available as part of an assembly or repair kit.

IMPCO Technologies, INC. reserves the right to add, delete or modify parts information without notice. Any component dimensions are solely for reference or installation purposes only. They are not to be used for quality, inspection or testing purposes.

About IMPCO

Our History

In 1957, Herbert V. Hills and Richard Baverstock founded the Imperial Machine Products Company in a small Quonset hut in South Gate, California. The following year, their first product was released. Called the "IMPERIAL," the automotive carburetor is still sold today as the CA300A. The company entered the industrial market with the introduction of the CA100 carburetor in 1960.

In 1967, AJ Industries (Alaska Juneau Gold Mining Company) purchased the company, renamed it IMPCO Carburetion and relocated to Cerritos, California. IMPCO purchased Beam Products Company in 1986 and in 1989, IMPCO became a public traded company after a leveraged buyout by AirSensors, Inc.

IMPCO rapidly expanded in the 1990s, with the purchase of the Garretson Equipment Company in 1997, followed by J & S Products and Algas Carburetion in 1998. The company facilities were expanded with the establishment of offices in Europe, Australia, Mexico and Japan and the name changed to IMPCO Technologies.

The Spectrum series of emission certified engines was launched in 2000 and by 2002, IMPCO attained a 70% market share.

In 2003, IMPCO joined the Italian company BRC and in 2006, the two companies were brought together as subsidiaries of Fuel Systems Solutions, Inc.

IMPCO Today

Over the past 50 years, IMPCO Technologies developed into a global business, serving the needs of customers in every major market with our patented Spectrum® Fuel Management Systems, Certified Engines and traditional gaseous fuel carburetion components. As a component of Fuel Systems Solutions, we are the world's leader in the technology, marketing and manufacturing of products and systems which allow internal combustion engines to operate on clean burning gaseous fuels such as LPG and Natural Gas.

 © IMPCO TECHNOLOGIES, INC.

IMPCO Offices

IMPCO Technologies operates business offices and manufacturing facilities around the world, dedicated to assisting OEMs, governments and companies. IMPCO Technologies provides product to Original Equipment Manufacturers and an extensive network of distributors. Individuals and small business fleet owners should direct their inquiries to one of the following distributors:

Corporate Headquarters
IMPCO Technologies, Inc.
3030 South Susan Street
Santa Ana, California 92704-6435
USA
Phone: (714) 656-1200
Fax: (714) 656-1400
sales@impcotechnologies.com
www.impcotechnologies.com

IMPCO Engine Systems
7100 E, 15 Mile Road
Sterling Heights, MI 48312
USA
(586) 264-1200
Email: SalesIES@impcotechnologies.com

Japan
IMPCO Technologies Japan Co. Ltd
3-9-4 Morooka Hakata-Ku
Fukuoka-City, Fukuoka 816-0094
Japan
Tel: +81 92 592 7270
Fax: +81 92 592 7280
email:info@impco.co.jp
web: www.impco.co.jp

Europe
IMPCO-BERU Technologies B.V.
Distributieweg 9, NL-2645EG
Delfgauw, The Netherlands
Tel: +31 15274 2550
Fax: +31 15274 2579
email: impco@impco.eu
web: www.impco.eu

IMPCO Distributors

IMPCO sells through its global distributor network. For product sales and technical information please contact a distributor near you. For distributors in countries not listed below, contact the IMPCO business office in your country for assistance.

All technical and/or product sales questions should be directed towards the distributors listed below. Distributors engineer and produce a wide variety of aftermarket conversion kits for on and off highway applications.

Distributors with multiple locations are noted with a * Please contact distributor for more information.

USA

California

Amerigas 16800 South Main Street Gardena, CA 90248	Phone: 800-325-4534 Fax: 877-743-7278 www.amerigas.com
Meeder Equipment Co.* 3632 South Maple Ave. Fresno CA 93725	800-448-6817 www.meeder.com
Teeco Products Inc.* 7471 Reese Road Sacramento CA 95828	916-688-3535 www.teecoproducts.com

Illinois

Alternate Fuel Systems 3232 S. Nordic Road Arlington Heights, IL 60005	847-437-2345 www.altfuel.com
Hendrix Industrial Gastrux 1301 Old Rand Road N. Wauconda, IL 60084	800-359-1369 www.hendrixsystems.com

Kansas

TVH Parts Co.* 16355 South Lone Elm Road Olathe, KS 66062	Phone: 913-829-1000 Toll-Free: 800-255-4109 Fax: 913-829-9208 http://www.tvh.com

Minnesota

ACME Alternate Fuel Systems Inc. 110 Butterworth St. Mankato, MN 56002	507-345-4000 www.acmecarb.com

© IMPCO TECHNOLOGIES, INC.

IMPCO Distributors

Carburetion and Turbo Systems Inc.
1897 Eagle Creek Blvd
Shakopee, MN 55379

952-445-3910
www.carbturbo.com

Mississippi

Moulden Supply Co.
P.O. Box 1247
Jackson, MS 39205

800-221-8467

Ohio

Alternate Fuels Equipment*
20638 Krick Rd.
Cleveland, OH 44146

Phone: 440-232-4111
Toll-free: 800-772-4836
www.alternativefuelsequipment.com

Texas

Ignition Systems & Controls *
6300 West Hwy. 80
Midland, Texas 79706

Phone: 432-697-6472
Toll-free: 1-800-777-5559
www.ignition-systems.com

Australia

IMPCO Technologies (Australia) Pty Ltd
25 Lecton Drive
Dandenong South, Victoria 3175 Australia

Phone: +61 (3) 8788 1000
Fax: +61 (3) 8788 1090
email: sales@impco.com.au
web: www.impco.com.au

Canada

Proquip Sales Inc.
Bay# 7, 3815-61st Ave S.E.
Calgary AB T2C-1V5
Canada

Phone: 403-692-9388
Toll-free 866-692-8132 (Canada only)
Trevor Duffield or Randy Burkett

Gas Drive Global
4700 47 Street SE
Calgary AB T2B 3R1
Canada

Phone: 403-387-6300
Fax: 403-279-7649
www.gasdriveglobal.com

Canada TVH
Ontario Office & Distribution Center
1039 Cardiff Blvd.
Mississauga, Ontario L5S 1P4

Phone: 905-564-0003
Toll-free: 800-509-7668
Fax: 905-564-5717
E-mail: TVHCanada@tvh.com

IMPCO Distributors

Europe

IMPCO Technologies BV
Distributieweg 9, NL-2645EG
Delfgauw, The Netherlands

Phone:+31(0)15 274 25 50
Fax: +31(0)15 274 25 79

Mexico

CARBURAGAS, SA DE CV
Dr. R. Michel No. 3053
Alamo Industrial
Tlaquepaque Jal. 44890

Phone: 33-3838-0383
www.carburagas.com.mx

Equipos Para Gas SA DE CV (EGSA)
Calle 11 Norte No. 117
Cd. Industrial, Celaya, Gto. 38010

Phone: 461-611-6177
www.egsa.com.mx

Total Control Ambiental S.A. de C.V.
Av. Central #58
Ecatepec, Edo. De Mexico
55320 Mexico

Phone: +52 (55)56004036
Fax: +52 (55)56004036 www.totalcontrolaambiental.com.mx

Argentina

Tradefin S.A.
Uruguay 4798
San Isidro - B1643ELX
Buenos Aires

Phone: +54 11 4719 6909
Fax: +54 11 4719 6909 ext 130
Contact: Sergio Monaco Sales Manager
smonaco@tradefin.com.ar
www.tradefin.com.ar

China

Project Engineering, Inc.
GuangQing (Anhui) Gas Technologies Co., Ltd.
Room 1008, XingKe Building
No. 58, FeiXi Road
Hefei, Anhui, Post Code 230022
China

Ph.+86 551 3627967
Fax+86 551 3636167
Mobile +86 138 5604 0507
Contact: William Jiang, Manager
www.peichina.cn

India

CLH Gaseous Fuel Applications Pvt. Ltd.
Plot No. 227, Udyog Vihar Phase IV
Gurgaon, India
122019

Ph : +91-124-4386990/1/2
Fax : +91-124-4386995
Mob: +91-9818427009
Email: sales@shigan.net
www.clhsystems.com

Advantek Fuel Systems Pvt Ltd
33 Functional Industrial Area
Patparganj, Delhi 110092
India

Phone: +91-11-42141133/44
Mobile: +91-9811801205
Email: vishal@advanteksystems.net
Contact: Vishal Singhal

© IMPCO TECHNOLOGIES, INC.

LIMITED WARRANTY
IMPCO TECHNOLOGIES, INC.

IMPCO Technologies, Inc. located at 3030 South Susan Street, Santa Ana Ca. 92704, USA warrants all IMPCO products to be free of defects in material and workmanship for a period of eighteen (18) months or 2000 hours whichever comes first, commencing from date of manufacture. The sole obligation of IMPCO under the terms of this warranty is limited to replacing or repairing any IMPCO product which, under normal conditions of use and service, proves to be faulty due to any defect in material or workmanship. If IMPCO is unable to repair or replace after a reasonable number of attempts IMPCO will provide a full refund of purchase price. These remedies are the only remedies for breach of warranty.
This warranty does not cover labor costs incurred in the diagnosis of defects, removal or reinstallation of the equipment nor does it cover any other contingent or consequential expense including freight to return the product. All returns must be authorized by IMPCO via a RMA number which is assigned by IMPCO. All products received without an authorized RMA number will be sent back to the sender collect.

This warranty is limited to the original end user only. Specifically excluded from this warranty are products which have been subjected to neglect, abuse, improper application, unsuitable installation environment, unauthorized attachments or modifications, or damage caused by disasters such as fire, flood, wind, and lightning. Also excluded are products which have been repaired or adjusted by persons other than an authorized or contractual IMPCO service representative and IMPCO products in which parts or products other than those manufactured or supplied by IMPCO have been used unless the original end user can demonstrate to the satisfaction of IMPCO that said repair or use of non-IMPCO products has in no way contributed to the warranty claim

UNDER NO CIRCUMSTANCES WILL IMPCO BE LIABLE FOR CONSEQUENTIAL, INCIDENTAL OR SPECIAL DAMAGES BASED ON BREACH OF WARRANTY, BREACH OF CONTRACT, NEGLIGENCE, STRICT LIABILITY, TORT, OR ANY OTHER LEGAL THEORY OR ANY EXPENSES INCURRED BY REASON OF THE USE OR SALE OF ANY SUCH PRODUCT WHICH INCLUDE BUT NOT LIMITED TO LOSS OF PROFIT, LOSS OF SAVINGS OR REVENUE, LOSS OF USE OF PRODUCT, COST OF CAPITAL, COST OF ANY SUBSTITUTE EQUIPMENT, FACILITIES, OR SERVICES OR DOWNTIME OR THE CLAIMS OF THIRD PARTIES INCLUDING CUSTOMERS AND INJURY TO PROPERTY.

THERE ARE NO EXPRESS WARRANTIES OTHER THAN SET FORTH IN THIS DOCUMENT. THE WARRANTIES CONTAINED HEREIN ARE IN LIEU OF ALL OTHER WARRANTIES IMPLIED BY STATE LAW, WHETHER MERCHANTABILITY OR FITNESS FOR A PARTICULAR APPLICATION OR FITNESS FOR A PARTICULAR PURPOSE OR USE OR OTHERWISE.

Some states do not allow limitations on how long an implied warranty lasts, therefore the above limitation may not apply to you. In addition, some states do not allow for the exclusion or limitation of incidental or consequential damages therefore the above limitations or exclusions may not apply to you. This warranty gives you specific legal rights and you may have other legal rights which vary from state to state.

This agreement allocates the risk of product failure between IMPCO and the original end user. This allocation of risk is recognized by both parties and is reflected in the price of the product.

Information in IMPCO's catalogs or other documents is given after the exercise of due care in its compilation, preparation, and issuance; however, **IMPCO DISCLAIMS ANY LIABILITY RESULTING FROM SUCH INFORMATION** except for the obligation under the warranty provided above to replace or repair the product or, at IMPCO's option, to refund the purchase price.

IMPCO F10.6.01-1 4/4/08

Standard LPG Fuel System Engine Maintenance Schedul e
(Typically Applicable for CNG)

Perform the following maintenance on the engine at the hours indicated and at equivalent hour interval s thereafter.										
!"#$ %&#'()'&'*) $*")+,-) ./.)$)'($ (") %&',0&*(,.).1$.)*2%3 %)'+)+ %&#'()'&'*) #'().4&-$ (2 %&#'(&#' /.2/).)'5 #')6)7,#/%)'(0,'*(#2'8 9)+).&-: ;(&(): 2. <2*&- .)5,-&(#2'$ %&= .)7,#.) &++#(#2'&- 2. %2.) 0.)7,)'(#'$/)*(#2' 2. %&#'()'&'*) #'().4&- $ ("&' ("2$) $/)*3 #0#)+ &>24)8 ?")*@ A#(" (") &,("2.#("&4#'5 B#$+#*(#2' 02. +)(&#-$8	C'().4&- D2,.$									
	E&#-=	FGGG	FHGG	IGGG	IHGG	JGGG	JHGG	KGGG	KHGG	H
L)').&- M&#'()'&'*) ;)*(#2'										
N#$,&- *")*@ 02. 0-,#+ -)&@$		O								
?")*@)'5#') 2#- -)4)-	O									
?")*@ *22-&'(-)4)-	O									
?"&'5))'5#') 2#- &'+ 0#-().	Follow Engine Manufactures Recommendations									
?")*@ <PL $=$()% 02. -)&@$	After any service or maintenance activity									
C'$/)*(&**)$$2.= +.#4) >)-($ 02. *.&*@$: >.)&@$: /$#($ 2. 5-&Q#'5		O		O		O		O		O
C'$/)*( )-)*(.#*&- $=$()% A#.#'5 02. *,($: &>.&$#2'$ 2. *2..2$#2'				O				O		
C'$/)*(&-- 4&*,,% -#)$ &'+ 0#((#'5$ 02. *.&*@$: >)&@$ 2. "&.+)'#'5				O				O		
R'5#') ?22-&'(;)*(#2'										
?-)&' +)>.#$ 0.2% .&+#&(2. *2.)	Every 100 hours or 60 days of operation									
?"&'5) *22-&'(	Follow Engine Manufactures Recommendations									
C'$/)*(*22-&'("2$)$ 02. *.&*@$: $A)--#'5 2. +)(). #2.&(#2'		O		O		O		O		O
S)/-&*) *22-&'("2$)$ &'+ &**)$$2.= +.#4) >)-(	Every 2,000 hours or two years, whichever occurs fi rst									
R'5#') C5'#(#2' ;=$()%										
C'$/)*(T&(().= *&$) 02. -)&@$ 2. +&%&5)		O		O		O		O		O
C'$/)*(>&(().= *&>-)$ 02. +&%&5) *2..2$#2' 2. *2'(&%#'&(#2'		O		O		O		O		O
?")*@ &--)-)*(.#*&- *2")*(2. .)(&#'). -2*@$		O		O		O		O		O
C'$/)*(*.&'@ $)'$2. (#%#'5 A")- 02. +)>.#$ 2. +&% &5)	Every 100 hours or 60 days of operation									
?-)&' #5'#(#2' *2#-		O		O		O		O		O
S)/-&*) $/&.@ /-,5$			O			O			O	
S)/-&*) +#$(.#>,(2. *&/ &'+ .2(2.						O				
?")*@ $/&.@ /-,5 A#.)$ 02. *,($ &>.&$#2'$ 2. "&.+)'#'5			O						O	
S)/-&*) $/&.@ /-,5 A#.)$						O				
9,)- ;=$()% M&#'()'&'*)										
?-)&' &#. 0#-().)-)%)'(	Every 200 hours, or every 100 hours in dusty environ ment									
S)/-&*) &#. 0#-().)-)%)'(	Annually, or Bi-annually in dusty environments									
S)/-&*) 0,)- 0#-().					O					O
C'$/)*(;",(3200 N&-4) 02. -)&@$ &'+ *-2$#'5			O			O				
?")*@ ("2((-) -#'@&5) 02. $(#*@#'5				O				O		
<)&@ *")*@ 0,)- -#')$				O				O		
?")*@ &#. #'+,*(#2' 02. -)&@$				O				O		
?")*@ %&'#02-+ 02. 4&*,,% -)&@$				O				O		
?")*@ #'B)*(2. U .&#-$ 02. -)&@$				O				O		
C'$/)*(-2A /.)$$,.) .)5,-&(2. 02. *22-&'(-)&@$	Annually or every 1500 hours									
S)>,#-+ 2. .)/-&*) -2A /.)$$,.) .)5,-&(2.	Every 2500 hours									
R'5#') RV"&,$(;=$()%										
C'$/)*( )V"&,$(%&'#02-+ 02. -)&@$				O				O		
C'$/)*( )V"&,$(/#/#'5 02. -)&@$				O				O		
?")*@)V"&,$(*&.>2' %2'2V#+))%#$$#2' &'+ &+B,$(#0 .)7,#.)+			O			O			O	
C'$/)*(%,00-). 02. %)*"&'#*&- +&%&5)			O						O	

Note that propane engines are designed to operate on HD¡¾5 or HD¡¾10 specification LPG fuel. Fuel other than HD¡¾5 or HD¡¾ 10 may cause harm to the engine¡¾s emission control system and a warranty claim may be denied on this basis if operators can readily find the proper fuel. Use of any other fuel may result in your engine no longer operating in compliance with CARB or EPA emissions requirements. * Not Applicable in the state of California.*

© IMPCO TECHNOLOGIES, INC.

SAFETY

WARNING

READ THE STATEMENTS BELOW BEFORE INSTALLING ANY IMPCO EQUIPMENT

WARNING: IMPROPER INSTALLATION OR USE OF ANY OF THESE PRODUCTS MAY CAUSE SERIOUS INJURY AND/OR PROPERTY DAMAGE.

!!"#$%&'()$'*"('*&$+,'("+-"./+*"*'&.+%-"*/%)!(",'" +*"+-"-').$!"%-" "!'4!"*)$0 &'" -("./"'# $5+-6",$ #'$0%$1'("%-!2"3/'-"./"'4'/+&!'" 5'"+*"*'.7""

SERVICE TECHNICIANS AND USERS
CAREFULLY READ AND ABIDE BY THE PROVISIONS SET FORTH IN NATIONAL FIRE PROTECTION ASSOCIATION PAMPHLET #37 FOR STATIONARY ENGINES, #52 FOR CNG VEHICULAR FUEL SYSTEMS OR #58 FOR LPG SYSTEMS. BEFORE INSTALLING ANY IMPCO, BEAM, ALGAS OR GARRETSON PRODUCTS TO ENSURE COMPLIANCE WITH THE PAMPHLETS OR ANY OTHER SAFETY AND/OR EMISSION REGULATIONS.

INSTALLERS
LPG INSTALLATIONS IN THE UNITED STATES MUST BE DONE IN ACCORDANCE WITH FEDERAL STATE OR LOCAL LAW, WHICHEVER IS APPLICABLE AND NATIONAL FIRE PROTECTION ASSOCIATION PAMPHLET #58, STANDARD FOR STORAGE AND HANDLING OF LIQUEFIED PETROLEUM GASES TO THE EXTENT THESE STANDARDS ARE NOT IN VIOLATION WITH FEDERAL, STATE OR LOCAL LAW.

IN CANADA
REFER TO CAN/CGA PROPANE INSTALLATION CODES.

CNG INSTALLATIONS IN THE UNITED STATES
MUST RE DONE IN ACCORDANCE WITH FEDERAL STATE OR LOCAL LAW AND NATIONAL FIRE PROTECTION ASSOCIATION PAMPHLET #52, COMPRESSED NATURAL GAS (CNG) VEHICULAR FUEL SYSTEMS TO THE EXTENT THESE STANDARDS ARE NOT IN VIOLATION WITH FEDERAL, STATE OR LOCAL LAW.

IN CANADA
REFER TO CAN/CGA CNG INSTALLATION CODES.

LPG AND/OR NATURAL GAS INSTALLATIONS ON STATIONARY ENGINES
MUST BE DONE IN ACCORDANCE WITH FEDERAL, STATE OR LOCAL LAW AND NATIONAL FIRE PROTECTION ASSOCIATION PAMPHLET #37, STATIONARY COMBUSTION ENGINES AND GAS TURBINE ENGINES, TO THE EXTENT THESE STANDARDS ARE NOT IN VIOLATION WITH FEDERAL, STATE OR LOCAL LAW. FAILURE TO ABIDE BY THE ABOVE WILL VOID ANY IMPCO WARRANTY ON THE PRODUCTS AND MAY CAUSE SERIES INJURY OR PROPERTY DAMAGE. DUE TO THE INHERENT DANGER OF GASEOUS FUELS THE IMPCO PRODUCTS SHOULD NOT BE INSTALLED OR USED BY PERSONS NOT KNOWLEDGEABLE OF THE HAZARDS ASSOCIATED WITH THE USE OF GASEOUS FUELS.

SAFETY

READ BEFORE PERFORMING ANY SERVICE, MAINTENANCE OR REPAIR ON THE FUEL SYSTEM

There are safety regulations and standards that must be followed when installing or servicing gaseous fuel equipment on engines. It is highly recommended you obtain and read the following National Fire Protection Association (NFPA) guidelines:

- NFPA #37-Combustion Engines
- NFPA #52-CNG Vehicular Fuel Systems
- NFPA #54-National Fuel Gas Codes
- NFPA #58-LP Gas Storage
- NFPA #59-LP Gas Utility Plants
- NFPA #59A-LN Gas Storage and Handling

To order these documents, contact the National Fire Protection Agency at (800) 344-3555 or go to www.nfpa.org, expand the *Codes and Standards* menu, and click on *Document List and Code Cycle Information* to order online.

There are state standards and regulations enforced by the state fire marshal in most states.

There may be other local standards set by counties, cities and municipalities. Be sure to consult all regulatory agencies to assure adherence to all standards in enforcement.

Safety in the workplace is everyone!s responsibility. Regardless of the type work you do, it is very important that you pay attention to what you are doing for your safety and the safety of those around you.

The following points are things to keep in mind when working on internal combustion engines and gaseous fuel systems:

- Before working on any fuel system, study the NFPA standard for the fuel in use.
- Before working on any fuel system, read and understand all manufacturers! recommended procedures.
- Before working on any fuel system, make sure you have local code approved safety goggles, face shields, gloves and clothing.
- Before working on any fuel system, make sure there is adequate ventilation.
- Before working on any fuel system, turn OFF the fuel system supply valve and run the engine until it stalls by running out of fuel. If this is not possible, slowly bleed the fuel from all lines before working on the fuel system or engine.
- After working on any fuel system, perform a leak test before starting the engine.

Remember:

- LPG is heavier than air and will sink to the lowest level. Avoid areas near flow drains or lubrication pits where escaped fuel may collect and all sources of ignition.
- Natural gas is lighter than air and will rise to the highest point. Avoid areas near overhead heaters and all other sources of ignition.

 © IMPCO TECHNOLOGIES, INC.

CARBURETION THEORY AND OPERATION

Carburetor: IMPCO carburetors have an air valve design, utilizing a relatively constant pressure drop to draw fuel into the carburetor from cranking to full load. The advantage of this design is a strong "signal" or vacuum set up by a metering spring (A) holding the air valve (B) closed. A pressure drop (C) under the air valve of approximately 6 inches of w.c. (water column) is required to open the valve during cranking. The vacuum is communicated to the converter (D). Additionally, air/valve vacuum is used to activate the vacuum fuel lock (if equipped with lock/filter).

Once the engine stops, fuel is sealed off within the carburetor, in the converter and fuel lock, providing a triple seal for safety.

The air/fuel metering device (referred to as a mixer), is completely self-contained and does not require a linkage or idle vacuum line to the intake manifold. This construction provides a wide range of flexibility when installing a mixer or complete carburetor.

Vaporizer. The IMPCO converter is a combined two-stage regulator and vaporizer. It receives a liquid fuel at tank pressure from the filter fuel lock (E) and reduces that pressure in two stages to slightly less than atmospheric (F). When the engine is cranking or running, a partial vacuum is created in the fuel line to the carburetor (D), which opens the regulator, permitting fuel to flow to the carburetor.

In the process of reducing the pressure from tank of approximately 180 psi, the liquid LPG expands as it vaporizes, causing refrigeration. To compensate for the cooling effect and to assist in vaporization, water from the engine cooling system is circulated through a heat exchanger (G). The fuel flow is sealed off when the engine is stopped (H).

IMPCO makes various sizes of converters to suit a wide range of horsepower applications. These converters are also available with a variety of options.

Fuelock/Filter. The IMPCO carburetion system utilizes a fuel lock (not to be confused with the fuel lockoff valve). When a slight vacuum (2" w.c.) occurs, fuel is allowed to flow through a fuel filter and to the vaporizer. When the engine stops, regardless of whether the ignition key is on or off, the fuel is automatically shut off.

A filter is used to remove any large solid particles out of the fuel before entering the high pressure side of the vaporizer.

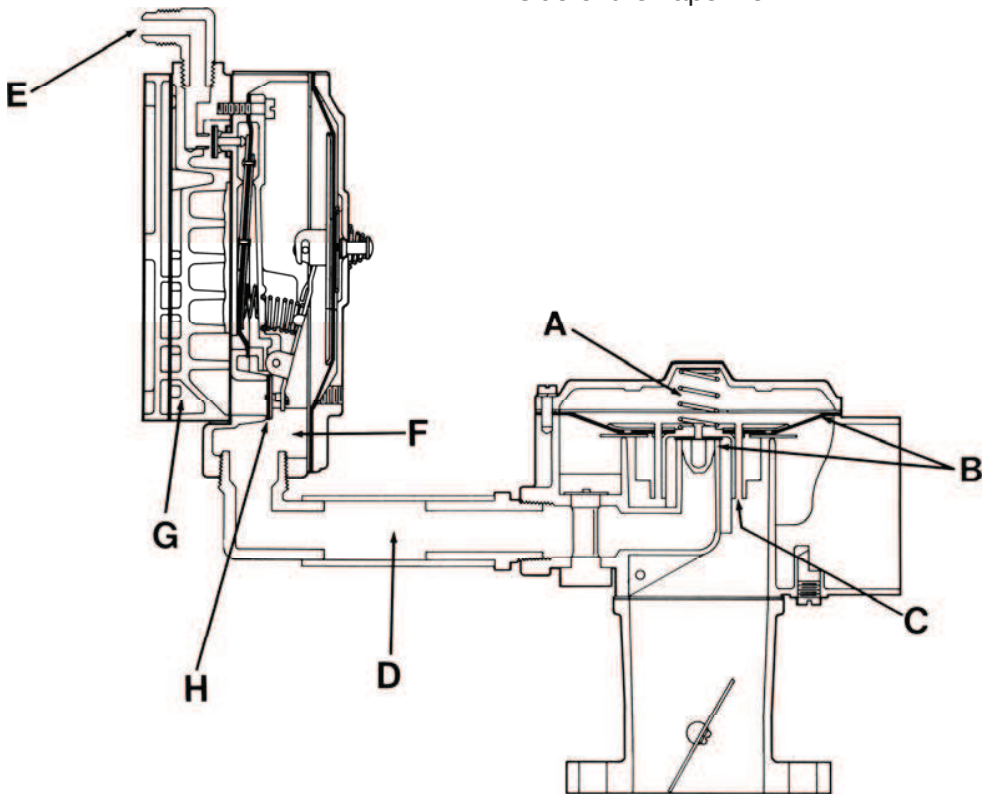

DIAPHRAGM OPERATED AIR-GAS VALVE CARBURETION

Most IMPCO air valve carburetors use diaphragms made of various materials such as synthetic rubber, silicone, hydrin and fiberglass. The Model 55 uses a metal piston with a sealing ring in place of a diaphragm for the purpose of reducing the carburetor size for small engines, however, the same operating principal applies to all. Cranking the engine lowers pressure in shaded area (see illustration below) causing the piston to descend. Through passages (P) in the air valve, the lowered pressure is communicated to the upper side of the diaphragm (D). As a result, atmospheric pressure pushing upward on the diaphragm lifts it against the downward pressure of the metering spring (S).

Approximately 0.2 psi (6" w.c.) of pressure is required to lift the air valve off its seat. Approximately 0.5 psi (13.8" w.c.) lifts the valve to the top of its travel in full open position.

Lowered pressure communicated to the top of the diaphragm varies with engine speed and position of throttle valve opening (T). The air valve assembly measures the air flow into the engine by moving precisely in response to the demands of the engine and throttle valve position.

The controlled pressure drop of 0.2 to 0.5 psi (6" - 13.8" w.c.) set up by the metering spring provides the signal or force necessary to draw fuel into the air stream within the carburetor. The gas metering valve (V) is attached to the air valve assembly and is shaped to admit the correct amount of fuel from the gas jet to mix with incoming air at any opening of the air valve.

IMPCO carburetors provide two limited-range mixture adjustments:

1. Idle Air Bypass Adjustment (I). The total volume of air and fuel passing the closed throttle at idle is constant. The idle adjustment bypasses a portion of incoming air around the air valve opening. As the idle adjustment is opened, the air valve partially closes, thereby closing the gas metering valve and leaning the idle air/fuel mixture.
2. Power Mixture Adjustment (A). Controls mixtures when gas metering valve is withdrawn from the jet. This adjustment is effective only when the engine approaches full-load condition and can be set only with the engine loaded, at or close to its rated rpm limit.

Mixtures between idle and full-load conditions are controlled by the shape of the gas metering valve, which is designed to produce lean mixtures at light loads and increasingly rich mixtures at heavier loads and higher engine speeds. The shape of the gas valve is designed for optimum air/fuel mixtures.

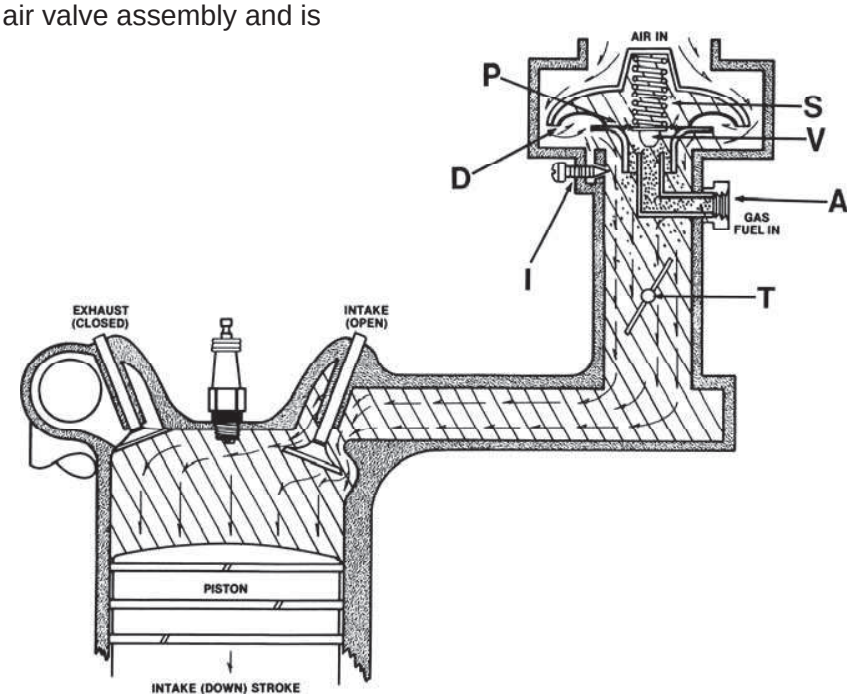

 © IMPCO TECHNOLOGIES, INC.

SELECTING THE CORRECT CARBURETOR SIZE

Air-Flow Capacities It is important to correctly match the air-flow capacity of the IMPCO carburetor/mixer to the engine air-flow requirement. If the carburetor/mixer is too small, then the power output of the engine will be limited. Conversely, a carburetor that is too large for an engine will create problems with idle stability and inconsistent fuel mixtures, especially at low speed. As a general rules, the air flow capacity of the carburetor should be reasonably close to the air flow requirement of the engine. If a carburetor is not available that matches the engine's air flow requirements, then it is usually recommended to use a larger carburetor than a smaller one (round the CID up). In general, use a smaller carburetor for maximum efficiency and a larger one for maximum power.

Consider these options when determining your carburetor/mixer needs.

The type of service the engine provides is another necessary consideration in selecting the appropriate carburetor (or mixer). An engine which is never operated at wide open throttle provides the best performance and service using carburetion, such as lift trucks and some passenger car applications. These engines have a degree of under carburetion, are easier to start and will develop the low end torque required suited for this type of service.

Engines used in high rpm ranges can be equipped with carburetors delivering somewhat over the air-low capacity dictated by the engine's air-flow requirement and the larger capacity carburetor will be able to respond to maximum air-flow requirements.

	ENGINE RPM (REVOLUTIONS PER MINUTE)																									
CID	400	600	800	1000	1200	1400	1600	1800	2000	2200	2400	2600	2800	3000	3200	3400	3600	3800	4000	4200	4400	4600	4800	5000	5200	5400
50	5	7	10	12	15	17	20	22	25	27	30	32	34	37	39	42	44	47	49	52	54	57	59	61	64	66
100	10	14	20	25	30	34	39	44	49	54	59	64	69	74	79	84	89	93	98	103	108	113	118	123	128	133
150	15	22	30	37	44	52	59	66	74	81	89	96	103	111	118	125	133	140	148	155	162	170	177	184	192	199
200	20	30	39	49	59	69	79	89	98	108	118	128	138	148	157	167	177	187	197	207	216	226	236	246	256	266
250	25	37	49	61	74	86	98	111	123	135	148	160	172	184	197	209	221	234	246	258	271	283	295	307	320	332
300	30	44	59	74	89	103	118	133	148	162	177	192	207	221	236	251	266	280	295	310	325	339	354	369	384	398
350	34	52	69	86	103	121	138	155	172	189	207	224	241	258	275	293	310	327	344	362	379	396	413	430	448	465
400	39	59	79	98	118	138	157	177	197	216	236	256	275	295	315	334	354	374	394	413	433	453	472	492	512	531
450	44	66	89	111	133	155	177	199	221	243	266	288	310	332	354	376	398	421	443	465	487	509	531	553	576	598
500	49	74	98	123	148	172	197	221	246	271	295	320	344	369	394	418	443	467	492	516	541	566	590	615	639	
550	54	81	108	135	162	189	216	243	271	298	325	352	379	406	433	460	487	514	541	568	595	622	649	676		
600	59	89	118	148	177	207	236	266	295	325	354	384	413	443	472	502	531	561	590	620	649	679	708			
650	64	96	128	160	192	224	256	288	320	352	384	416	448	480	512	544	576	607	639	671	703	735				
700	69	103	138	172	207	241	275	310	344	379	413	448	482	516	551	585	620	654	689	723	758					
750	74	111	148	184	221	258	295	332	369	406	443	480	516	553	590	627	664	701	738	775						
800	79	118	157	197	236	275	315	354	394	433	472	512	551	590	630	669	708	748	787							
850	84	125	167	209	251	293	334	376	418	460	502	544	585	627	669	711	753	794								
900	89	133	177	221	266	310	354	398	443	487	531	576	620	664	708	753	797									
950	93	140	187	234	280	327	374	421	467	514	561	607	654	701	748	794										
1000	98	148	197	246	295	344	394	443	492	541	590	639	689	738	787											
1050	103	155	207	258	310	362	413	465	516	568	620	671	723	775												
1100	108	162	216	271	325	379	433	487	541	595	649	703	758													
1150	113	170	226	283	339	396	453	509	566	622	679	735														
1200	118	177	236	295	354	413	472	531	590	649	708															
1250	123	184	246	307	369	430	492	553	615	676																
1300	128	192	256	320	384	448	512	576	639																	
1350	133	199	266	332	398	465	531	598																		
1400	138	207	275	344	413	482	551																			
1450	143	214	285	357	428	499	571																			
1500	148	221	295	369	443	516	590																			
1550	152	229	305	381	457	534	610																			
1600	157	236	315	394	472	551	630																			
1650	162	243	325	406	487	568	649																			
1700	167	251	334	418	502	585	669																			
1750	172	258	344	430	516	603	689																			
1800	177	266	354	443	531	620	708																			
1850	182	273	364	455	546	637	728																			
1900	187	280	374	467	561	654	748																			
1950	192	288	384	480	576	671	767																			
2000	197	295	394	492	590	689	787																			
2050	202	303	403	504	605	706	807																			
2100	207	310	413	516	620	723	826																			
2150	212	317	423	529	635	740	846																			
2200	216	325	433	541	649	758	866																			
2250	221	332	443	553	664	775	885																			
2300	226	339	453	566	679	792	905																			
2350	231	347	462	578	694	809	925																			
2400	236	354	472	590	708	826	944																			
2450	241	362	482	603	723	844	964																			
2500	246	369	492	615	738	861	984																			
2550	251	376	502	627	753	878	1003																			

Engine Air flow requirements are listed in Cubic Feet per Minute (CFM) at 85% volumetric efficiency for 4-cycle engine (double the CFM for 2-cycle engines).

To convert liters (L) to CID, multiply the Liter Displacement by 61.02.

Example : 2.0 x 61.02 = 122.04 CID

Estimated Engine Air flow Requirements by CID and Maximum rpm (in CFM) based on 2" Hg Manifold Depression Industrial Engine. For Large Engine Applications, refer to IMPCO's Large Engine Catalog.

2) Determining Estimated Engine Air flow Requirements Using the chart on the previous Page, find the engine air flow requirements for the engine displacement at its maximum rpms.

To find the estimated air flow requirement for the engine you are converting:

- Locate the engine!s displacement (in CID) and maximum rpm on the chart.
- Draw a line across from the CID and down from the rpm.
- Where the lines cross is the air flow requirements (in CFM) for that engine.

Example:

A 351 CID turning 4000 rpm (wide open throttle). Nearest engine air-flow requirement from the chart is 344 cubic feet/minute

3) Selection of proper carburetor/mixer based on the engine!s air flow requirements. The following table gives the horsepower and maximum air flow ratings for IMPCO carburetors using LPG:

"#$%&	'()%$ *+ ,-./	01" ,23/
44	56 ,47/	889 ,4:/
:; ,<"=0> ? @&A(3/	56 ,47/	B4 ,74/
8;;	8C6 ,B8D5/	8B5 ,B6/
88;	8;: ,5B/	85; ,9;/
8C4	87: ,8;9DB/	C64 ,888/
C;;	C84 ,8:;D6/	674 ,8:6/
C;;E	CBC ,C85D5/	7:9 ,CC8/
C;;F	7C4 ,68:DB/	:9; ,6C8/
C8;	C84 ,8:;D6/	674 ,8:6/
CC4	C65 ,85:D5/	69; ,85B/
6;;@ ,8 ? C;/	C85 ,8;CD7/G	679 ,8:7/G
6;;@ , 4; ? 5;/	C5; ,8C5D7/G	76C ,C;7/G
7;;H1	6C; ,848/	4;; ,C6:/
7C4	C95 ,C87-./G	7:; ,C85/G
:;;I:;;H1	:;; ,775D7/	B:; ,746/
:;;EI:;;EH1	8;;; ,574D5/	8:;; ,544/

**Rated at 1.5" Hg manifold depression. All others rated at 2" Hg*

Note: The above specifications are for LPG. Reduce hp/kW output by 10-15% for Natural Gas. Mixers or Carburetors using Natural Gas have nominal inlet pressures of +5Jw.c. (over atmospheric).

4) Determine the engine!s displacement and maximum rpm.

Determine the engine!s maximum rpm either by locating it on the tachometer (if equipped) or from the user!s manual.

5) Naturally Aspirated Engines:

CID × RPM ÷ 1728 ÷ 2 × 0.85 = Air flow Requirement (CFM) The engine air flow requirements determined by this equation are for 4-cycle engines with 85% volumetric efficiency. For 2-cycle engines, omit the division by 2.

- Multiply the CID times the rpm.
- Divide the result by 1728 to convert the cubic inches per minute (CIM) to CFM.
- Divide this by 2 for a 4-cycle engine (a 4-cycle engine only has an intake cycle every other revolution). Omit this step if engine is a 2-cycle.
- Multiply by 0.85 (85% volumetric efficiency) to get the engine!s air flow requirement.

Example:

351 CID, 4-cycle carbureted engine with a maximum rpm of 2,000:

351 × 2000 ÷ 1728 ÷ 2 × 0.85 = 172.6 CFM

6) Turbocharged Engines (with mixer upstream of turbocharger):

Turbocharged engines supply an additional boost in pressure over a naturally aspirated engine which must be calculated into the equation. To accomplish this:

- Determine the boost pressure of the turbocharger in Pounds per Square Inch (psi).
- Determine the % increase in supplied air pressure.
- The following equation is performed to calculate the percentage (%) increase in supplied air pressure, including atmospheric pressure (at sea level is 14.7 psi):

  1 + ((boost pressure in psi) ÷ 14.7)

  CID × RPM ÷ 1728 ÷ 2 × 0.85 × (% available pressure increase) = CFM

© IMPCO TECHNOLOGIES, INC.

Example:
817 CID, 4-cycle turbocharged engine with boost pressure of 6 psi and a maximum rpm of 2,000:

817 × 2000 ÷ 1728 ÷ 2 × 0.85 × (1 + (6 ÷ 14.7)) =
817 × 2000 ÷ 1728 ÷ 2 × 0.85 × 1.41 = 567 CFM

Large Engine Applications: refer to IMPCO's Large Engine Catalog

FUEL TYPE AND REGULATOR

It is imperative that the fuel type and regulator be matched. Some regulators are designed for both liquid and vapor while others are designed only for vapor. Those regulators designed for both liquid and vapor can accommodate both types of fuels, however, there is a decrease in performance (maximum rated horsepower) when only vapor is used. NEVER USE LIQUID FUEL IN A REGULATOR DESIGNED FOR VAPOR ONLY.

DIAPHRAGM MATERIAL

Three diaphragm materials are commonly used, depending on the application:

BLACK: Hydrin diaphragm material is the standard material and is well suited for the most common applications.

YELLOW: Silicone diaphragm material is the optional upgrade material that provides excellent flexibility in cold weather climates and is more resistant to chemical contamination.

BLUE: Fluorosilicone diaphragm material provides excellent high and low temperature durability with increased chemical resistance. This material is recommended for turbo applications.

UL LISTINGS

If a part is noted in the catalog as "UL listed," the associated UL file may also be listed. To review the UL file, refer to UL's Online Certifications directory:

http://database.ul.com/cgi-bin/XYV/template/LISEXT/1FR AME/index.htm

CARBURETORS & MIXERS

 © IMPCO TECHNOLOGIES, INC.

MODEL CA55 CARBURETOR

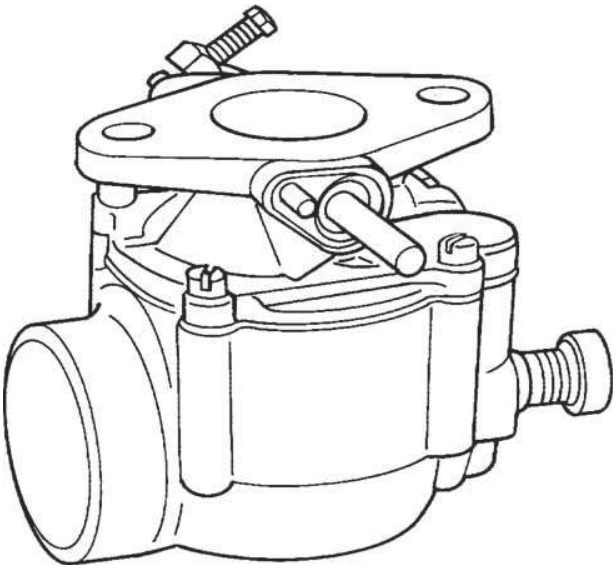

DESCRIPTION

IMPCO's CA55 model carburetors are offered in four design variations, providing proven, effective solutions for optimum metering and delivery of either LPG Vapor or Natural Gas. The standard model can be mounted in either an updraft, downdraft, or sidedraft orientation, supplying either LPG or Natural Gas to engines up to 73 hp (1 to 54kW), with a flow rate of 118 CFM (55.7 L/s). Various SAE flanges and air horn sizes are available.

SPECIFICATIONS

Fuel Type	LPG Vapor or Natural Gas
Inlet Pressure	-1.5! w.c. (-0.37 kPa)
Operating Temperature Range	-40°F to +250°F (-40°C to +121°C)
Mounting Position	Vertical
Diaphragm Material	N/A
HP/kW Rating	Up to 73 hp (54 kW) @ 118 CFM (55.7 L/s) and 2.0! in Hg manifold depression

DIMENSIONS

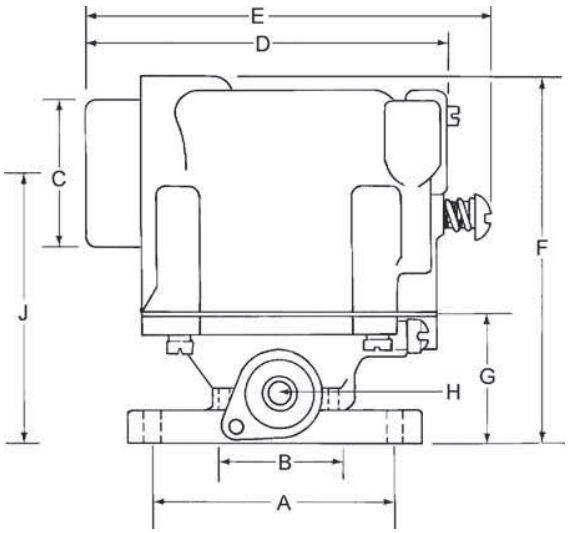

Carburetor	Mixer	Throttle Body	SAE Flange	NPT Fuel Inlet	A Center to Center Bolt Spacing	B Bore	C Air Horn Diameter	D Overall Width	E Max Width Incl. Idle Screw	F Overall Height	G Throttle Body Height	H Throttle Shaft Dia.	J Flange to Ctr. Of Air Horn
CA55-4	CA55M-2	AT2-25	3/4"	3/8"	57.2mm (2.250")	27.0mm (1.188")	41.3 mm (1.875")	96.9 mm (3.813")	122 mm (4.813")	95.3 mm (3.750")	33.4 mm (1.313")	6.4 mm (.250")	71.5 mm (2.813")
CA55-6	CA55M-4	AT2-26	1"	3/8"	60.3 mm (2.375")	30.2 mm (1.188")	47.6 mm (1.875")	96.9 mm (3.813")	122 mm (4.813")	95.3 mm (3.750")	33.4 mm (1.313")	6.4 mm (.250")	71.5 mm (2.813")
CA55-8	CA55M-5	AT2-27	1 1/4"	3/8"	68.3 mm (2.688")	30.2 mm (1.188")	52.4 mm (2.063")	96.9 mm (3.813")	122 mm (4.813")	95.3 mm (3.750")	33.4 mm (1.313")	6.4 mm (.250")	71.5 mm (2.813")
CA55-14	CA55M-1	AT2-26	1"	3/8"	60.3 mm (2.375")	30.2 mm (1.188")	38.1 mm (1.500")	96.9 mm (3.813")	122 mm (4.813")	95.3 mm (3.750")	33.4 mm (1.313")	6.4 mm (.250")	71.5 mm (2.813")
CA55-017	CA55M-1	BT2-27-322	1"	3/8"	60.3 mm (2.375")	30.2 mm (1.188")	38.1 mm (1.500")	96.9 mm (3.813")	122 mm (4.813")	95.3 mm (3.750")	33.4 mm (1.313")	6.4 mm (.250")	71.5 mm (2.813")
CA55-20	CA55M-2	AT2-26	1"	3/8"	60.3 mm (2.375")	30.2 mm (1.188")	41.3 mm (1.625")	96.9 mm (3.813")	122 mm (4.813")	95.3 mm (3.750")	33.4 mm (1.313")	6.4 mm (.250")	71.5 mm (2.813")
CA55-20-2	CA55M-2-2	AT2-26	1"	3/8"	60.3 mm (2.375")	30.2 mm (1.188")	41.3 mm (1.625")	96.9 mm (3.813")	122 mm (4.813")	95.3 mm (3.750")	33.4 mm (1.313")	6.4 mm (.250")	71.5 mm (2.813")
CA55-40	CA55M-5	AT2-26	1"	3/8"	60.3 mm (2.375")	30.2 mm (1.188")	52.4 mm (2.063")	96.9 mm (3.813")	122 mm (4.813")	95.3 mm (3.750")	33.4 mm (1.313")	6.4 mm (.250")	71.5 mm (2.813")
CA55-64	CA55M-2	BT2-26-8	1"	3/8"	60.3 mm (2.375")	30.2 mm (1.188")	41.3 mm (1.625")	96.9 mm (3.813")	122 mm (4.813")	95.3 mm (3.750")	33.4 mm (1.313")	6.4 mm (.250")	71.5 mm (2.813")
CA55-66	CA55M-2	BT2-26-8	1"	3/8"	60.3 mm (2.375")	30.2 mm (1.188")	41.3 mm (1.625")	96.9 mm (3.813")	122 mm (4.813")	95.3 mm (3.750")	33.4 mm (1.313")	6.4 mm (.250")	71.5 mm (2.813")
CT55-10	CNG T/R	AT2-26	1"	3/8"	60.3 mm (2.375")	30.2 mm (1.188")	47.6 mm (1.875")	96.9 mm (3.813")	122 mm (4.813")	95.3 mm (3.750")	33.4 mm (1.313")	6.4 mm (.250")	71.5 mm (2.813")
CA55-171	NSS	BT2-71-2	3/4"	3/8"	76.0mm (2.992")	32.5mm (1.28")	52.1mm (1.97")	142.5mm (5.6")	142.5mm (5.6")	133mm (5.27")	33.4 mm (1.313")	6.4 mm (.250")	
CT55-0679	NSS	AT2-15983		3/8"	60.3 mm (2.375")	25.4mm (1.00")	52.1mm (2.05")	104.6mm (4.12")	70mm (2.75")	109.22mm (4.30")	26.1mm (1.03")	6.4 mm (.250")	

 © IMPCO TECHNOLOGIES, INC.

MODEL 55 CARBURETOR

CARBURETORS & MIXERS

COMPONENTS

ITEM	P/N	DESCRIPTION
1	S1-74	Screw, idle
2	NSS	Spring, idle screw
3	NSS	Plug, 1/8 NPT
4	NSS	Body assy
5	AV1-14925*	Air valve ass'y (std.)
	AV1-14925-3	Air valve ass'y (Rich)
6	NSS*	Ring, air valve sealing
7	NSS	Spring, air valve
	S2-14681	Spring, air valve, light tension
8	NSS*	Plate, ass'y
9	G1-92*	Gasket, throttle body to mixer
10	P4-1	Piston, idle cutoff
11	S2-44	Spring, idle cutoff
12	NSS	Screw, 10-24 x 5/8" SEMS (4)
13	S1-69	Screw, 1/4-28 x 5/16(2)
14	NSS	(Refer to AT2 Throttle body charts)
15	NSS	Pin, throttle stop (2)
16	NSS	Screw, 6-32 x 1/4 SAE (2)
17	NSS	Butterfly, 19.1 mm (.750")
	NSS	Butterfly, 25.4mm (1.000)
18	S5-6	Throttle shaft, 6.4mm (.250) dia.
19	B2-11	Bearing, Oilite, 6.4mm (.250") ID. (2)
	NSS	Bearing, Needle, .687 x .500 x .625
20	S3-8	Seal, 6.4mm (.250") shaft (2)
21	NSS	Ring, seal retainer (2)
22	AL1-8-1	Throttle stop ass'y: 6.4mm (.250) ID.
23	NSS	Throttle stop lever
24	NSS	Stop screw, 10-32 x 3/4
25	S2-15	Spring, idle stop screw
26	S1-18	Pin screw, throttle stop
27	AL1-7-1	Throttle lever w/screw
28	NSS	Throttle lever
29	NSS	Screw, 10-24 x 5/8"
30	NSS	Gasket, 1/2 SAE flange
	G1-16	Gasket, 3/4" SAE flange
	G1-17	Gasket, 1" SAE flange
	G1-18	Gasket, 1-1/4" SAE flange
	G1-120	Gasket, flange

*Included in Repair Kit

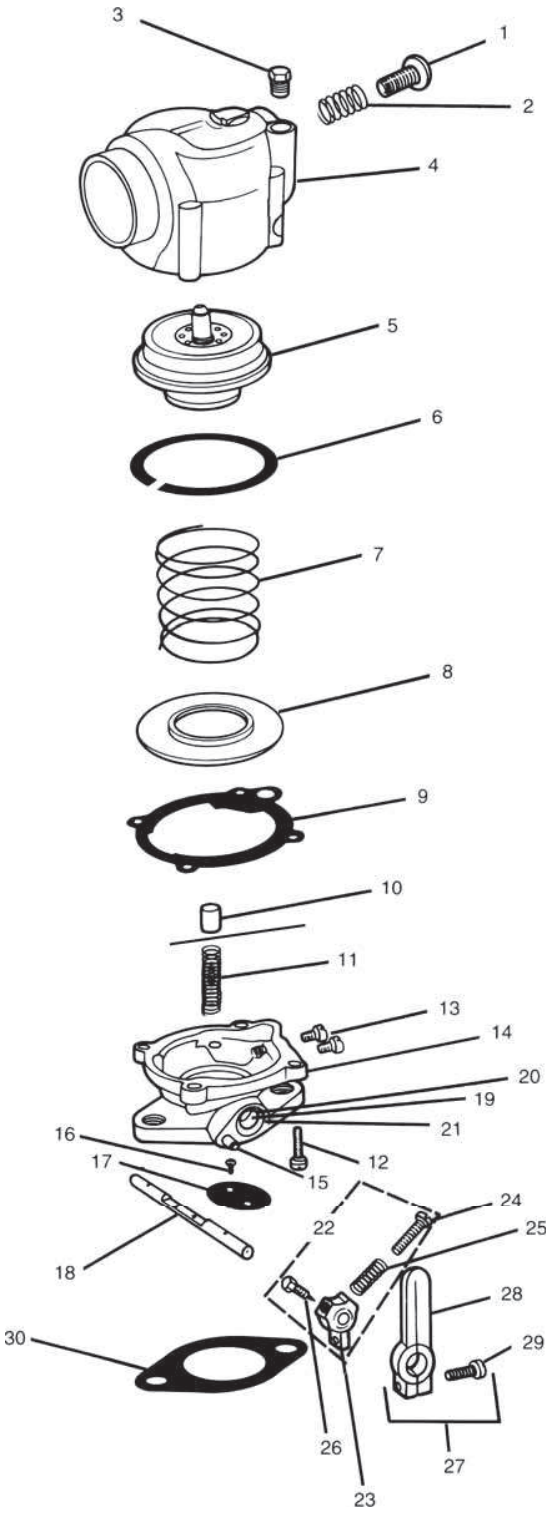

ASSEMBLIES & ACCESSORIES

MIXER ASSEMBLIES

P/N	BODY ASS'Y	AIR/GAS VALVE	AIR HORN DIA.	OVERALL WIDTH	OVERALL HEIGHT
CA55M-1	NSS	AV1-14925	38.1mm (1.500")	81.0mm (3.188")	61.9mm (2.438")
CA55M-2	NSS	AV1-14925	41.3mm (1.625")	81.0mm (3.188")	61.9mm (2.438")
CA55M-2-2	NSS	AV1-14926	41.3mm (1.625")	81.0mm (3.188")	61.9mm (2.438")
CA55M-3	NSS	AV1-14925	44.4mm (1.750")	81.0mm (3.188")	61.9mm (2.438")
CA55M-4	NSS	AV1-14925	47.6mm (1.875")	81.0mm (3.188")	61.9mm (2.438")
CA55M-5	NSS	AV1-14925	52.4mm (2.063")	81.0mm (3.188")	61.9mm (2.438")

THROTTLE BODIES

P/N	DESCRIPTION
AT2-26	1" SAE flange, 6.4 (2.50") shaft dia.
AT2-26-2	1" SAE flange, 6.4 (2.50") shaft dia., w/ vacuum advance
AT2-27	1-1/4" SAE flange, 6.4 (2.50") shaft dia.
AT2-27-2	1-1/4" SAE flange, 6.4 (2.50") shaft dia., w/ vacuum advance
AT2-44	Metric, 53.0 mm (2.087"), 27.0 mm (1.063") bore, offset

REPAIR KIT

P/N	DESCRIPTION
RK-CA55	Repair Kit, Mdl CA55
RK-CA55-2	Repair Kit, CA55 Carb Lean

BRACKET (OPTIONAL)

P/N	DESCRIPTION
AB4-23	Bracket Assy, Bodwn Wire: B4-23, C2-1, S1-8

LEVERS

P/N	DESCRIPTION
AL1-7-1	Assembly, 44.4 mm (1.750") long (standard)
AL1-7-2	Assembly, with 6.4 mm (.250") ball stud, 44.4 mm (1.750")
AL1-7-3	Assembly, 33.4 mm (1.313") long
AL1-7-4	Assembly, w/ swivel, 44.4 mm (1.750") long
AL1-7-5	Assembly, w/ Wisconsin swivel, 6.4 mm (.250") mounting
AL1-8-1	Stop assembly, 6.4 mm (.250") mounting I.D., 19.1 mm (.750") wide (standard)
AL1-25-1	Assembly, spring loaded, floating, 6.4 mm (.250") mounting I.D., 34.9 mm (1.375") long
AL1-26-1	Assembly, floating, 6.4 mm (.250") mounting I.D., 54.0 mm (2.125") long

TAMPER RESISTANT MIXER ASSEMBLIES

P/N	BODY ASS'Y	AIR/GAS VALVE	AIR HORN DIA.	OVERALL WIDTH
CT55M-2	CT55M-2SUB	NSS	41.4mm (1.63")	96.8mm (3.81")
CT55M-5-1	AB1-35-4	AV1-14925 (std.) AV1-14925-3 (rich)		
CT55M-5-3	AB1-35-4	AV1-14925 (std.) AV1-14925-3 (rich)		
CT55M-8	AB1-35-4	AV1-14925 (std.) AV1-14925-3 (rich)		

EXPANSION PLUGS

P/N	DESCRIPTION
P3-17956-3	Expansion Plug

 © IMPCO TECHNOLOGIES, INC.

MODEL CA55-250L MIXER

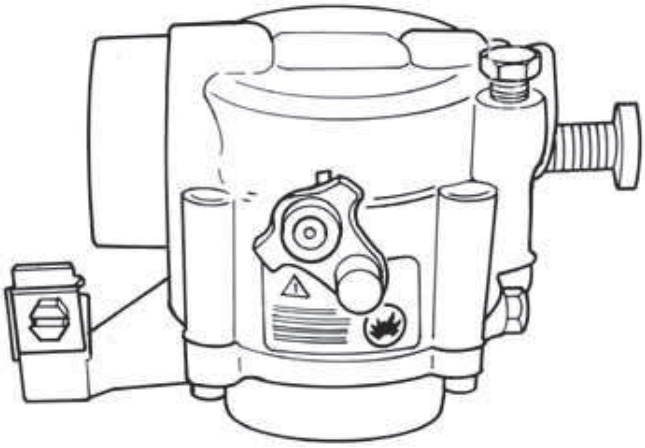

DESCRIPTION

Engineered for bi-fuel applications, this model features a movable air-valve assembly, thus providing additional air flow requirements of LPG Vapor or Natural Gas in gasoline bi-fuel applications. It is designed for use on engines up to 73 hp (1 to 54kW), with a flow rate of 118 CFM (55.7 L/s).

SPECIFICATIONS

Fuel Type ..... LPG Vapor or Natural Gas, Bi-Fueled with Gasoline
Inlet Pressure .....-1.5! w.c. (-0.37 kPa)
Operating Temperature Range .....-40°F to +250°F (-40°C to +121°C)
Mounting Position.....Vertical
Diaphragm Material.....N/A
HP/kW Rating.....Up to 73 hp (54 kW) @ 118 CFM (55.7 L/s) and 2.0! in Hg manifold depression

DIMENSIONS

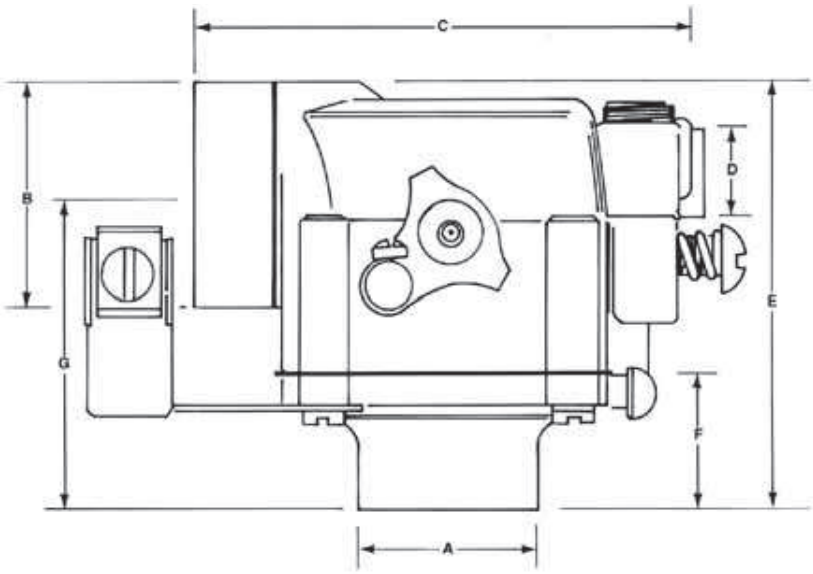

		A	B	C		D	E	F	G
STD. CARB.	HOSE ADAPTER	HOSE ADAPTER DIA.	AIR HORN DIA.	OVERALL WIDTH	MAX WIDTH INCL. IDLE SCREW	NPT FUEL INLET	OVERALL HEIGHT	HOSE ADAPTER HEIGHT	FLANGE TO AIR HORN FLANGE
CA55-256L	A3-83	47.6 mm (1.875")")	47.6 mm (1.875")")	96.9 mm (3.813")	127 mm (5.000")	3/8"	88.9 mm (3.500")	25.4 mm (1.000")	63.5 mm (2.500")
CA55-258 (no lifter)	A3-84	52.4 mm (2.063")	52.4 mm (2.063")	96.9 mm (3.813")	127 mm (5.000")	3/8"	88.9 mm (3.500")	25.4 mm (1.000")	63.5 mm (2.500")
CA55-258L	A3-84	52.4 mm (2.063")	52.4 mm (2.063")	96.9 mm (3.813")	127 mm (5.000")	3/8"	88.9 mm (3.500")	25.4 mm (1.000")	63.5 mm (2.500")

 © IMPCO TECHNOLOGIES, INC.

MODEL 55-250L MIXER

CARBURETORS & MIXERS

COMPONENTS

ITEM	P/N	PART DESCRIPTION
1	S1-74	Screw, idle
2	S2-88	Spring, idle screw
3	NSS	Plug, 1/8NPT
4	NSS	Body Assy
5	AV1-14925*	Air valve Assay (std.)
6	NSS*	Ring, Air Valve Sealing
7	NSS	Spring, air valve
	NSS	Spring, Air Valve (Europe)
8	NSS*	Plate Assay
9	G1-92*	Gasket, throttle body to mixer
10	S1-69	Screw, 114-28x5/16(2)
11	NSS	Adapter hose mount, 38.1 mm (1.500)
	NSS	Adapter hose mount, 41.3 mm (1.625)
	A3-83	Adapter hose mount, 47.6 mm (1.875)
	A3-84	Adapter hose mount, 52.4 mm (2.063)
	NSS	Adapter hose mount, 58.8mm (2.313)
12	AB4-13	Bracket Assembly, Boden wire
13	S1-3	Screw, 10-24x5/8” SEMS(4)

*Included in repair kit

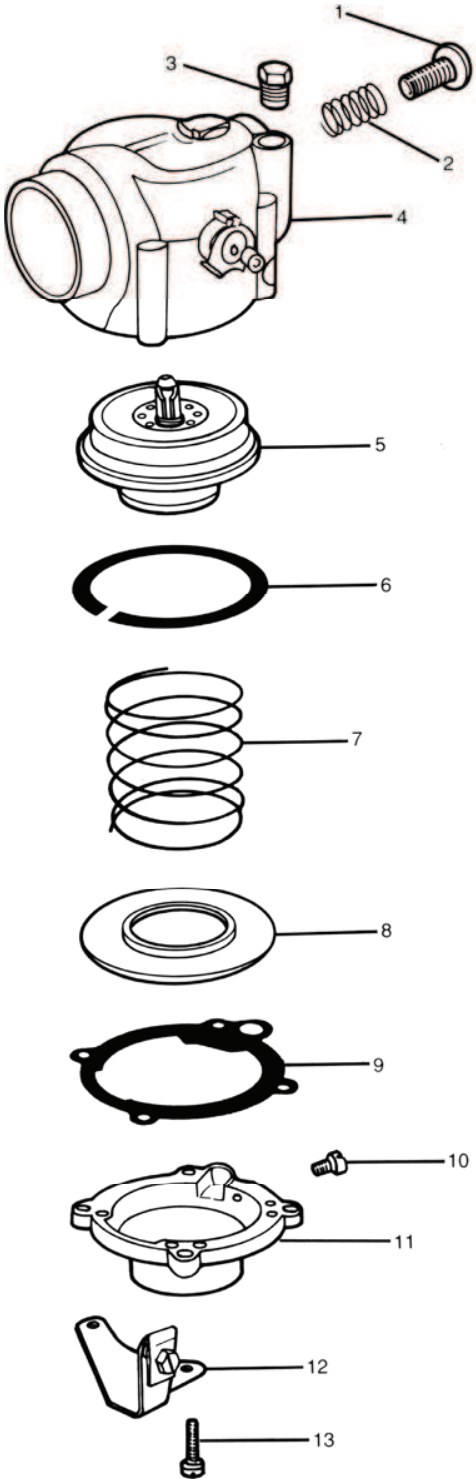

 © IMPCO TECHNOLOGIES, INC.

MODEL CA55-500L CARBURETOR

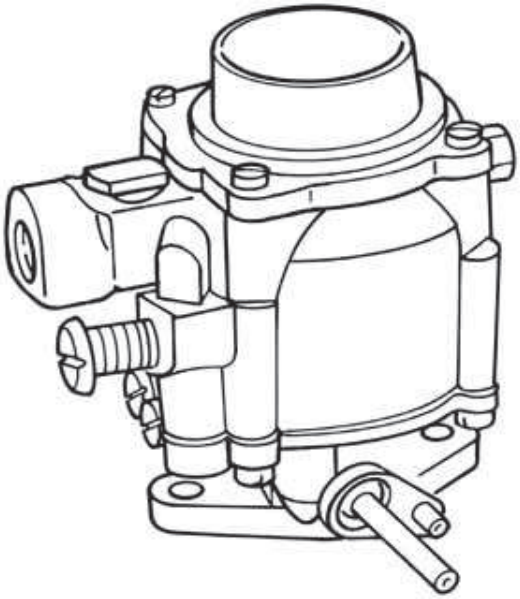

DESCRIPTION

This Model CA55 is for use with either LPG Vapor or Natural Gas on engines from 1.5 to 73 hp (1 to 54 kW) with a flow rate of 118 CFM (59.0 L/s). This flow-through design may be mounted in either a downdraft, updraft, or sidedraft configuration. Various air horns and flange sizes are available.

SPECIFICATIONS

Fuel Type	LPG Vapor or Natural Gas
Inlet Pressure	-1.5” w.c. (-0.37 kPa)
Operating Temperature Range	-40°F to +250°F (-40°C to +121°C)
Mounting Position	Vertical
Diaphragm Material	N/A
HP/kW Rating	Up to 73 hp (54 kW) @ 118 CFM (55.7 L/s) and 2.0” in Hg manifold depression

DIMENSIONS

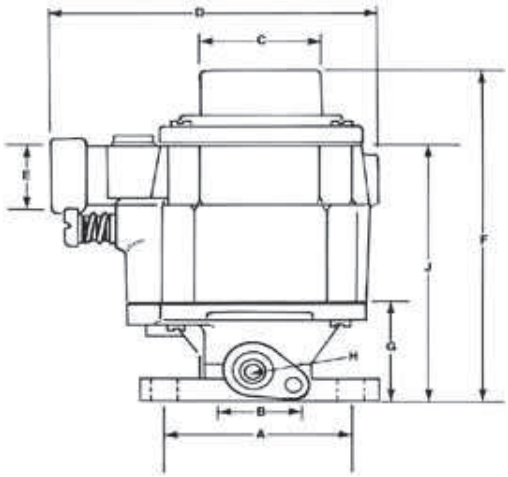

Standard Carb	Mixer	Throttle Body	SAE Flange	Air Horn Adapt.	A Ctr. To Ctr. Bolt Spacing	B Bore	C Air Horn Dia.	D Overall Width	E NPT Fuel Inlet	F Overall Height	G Throttle Body Height	H Throttle Shaft Dia.	J Flange to Top of Mixer
CA55-271	Replacement carburetor for Toyota 4Y engine												
CA55-503	CA55M-500	BT2-27-1-73	I-1/4"	A2-66	68.3 mm (2.375")	30.2 mm (1.188")	57.2 mm (l.875")	104.8 mm (4.125")	3/8"	112.7 mm (4.438")	33.4 mm (1.313")	6.4 mm (.250")	87.3 mm (3.438")
CA55-508	CA55M-500	AT2-27	1-1/4"	A2-39	68.3 mm (2.688")	30.2 mm (1.188")	52.4 mm (2.063")	104.8 mm (4.125")	3/8"	112.7 mm (4.438")	33.4 mm (1.313")	6.4 mm (.250")	87.3 mm (3.438")
CA55-510	CA55M-500	AT2-27	1-1/4"	A2-41	68.3 mm (2.688")	30.2 mm (1.188")	74.6 mm (2.938")	104.8 mm (4.125")	3/8"	117.5 mm (4.625")	33.4 mm (1.313")	6.4 mm (.250")	87.3 mm (3.438")
CA55-524	CA55M-500	BT2-26-6L	I"	A2-35	60.3 mm (2.375")	30.2 mm (1.188")	54.0 mm (2.125")	104.8 mm (4.125")	3/8"	112.7 mm (4.438")	33.4 mm (1.313")	6.4 mm (.250")	87.3 mm (3.438")
CA55-542	CA55M-500	BT2-26-4	I"	A2-35	60.3 mm (2.375")	30.2 mm (1.188")	54.0 mm (2.125")	104.8 mm (4.125")	3/8"	112.7 mm (4.438")	33.4 mm (1.313")	6.4 mm (.250")	87.3 mm (3.438")
CA55-553	CA55M-500	BT2-26-7	I"	A2-65	60.3 mm (2.375")	30.2 mm (1.188")	49.2 mm (1.938")	104.8 mm (4.125")	3/8"	128.6 mm (5.063")	33.4 mm (1.313")	6.4 mm (.250")	87.3 mm (3.438")
CA55-553-2	CA55M-500	BT2-26-7	I"	A2-65	60.3 mm (2.375")	30.2 mm (1.188")	49.2 mm (1.938")	104.8 mm (4.125")	3/8"	128.6 mm (5.063")	33.4 mm (1.313")	6.4 mm (.250")	87.3 mm (3.438")
CA55-576	CA55M-500	BT2-44-1		A2-59	53.0 mm (2.087")	27.0 mm (1.063")	43.0 mm (1.693")	104.8 mm (4.125")	3/8"	112.7 mm (4.438")	33.4 mm (1.313")	6.4 mm (.250")	87.3 mm (3.438")
CA55-577	CA55M-500	BT2-44-2		A2-59	53.0 mm (2.087")	27.0 mm (1.063")	43.0 mm (1.693")	104.8 mm (4.125")	3/8"	112.7 mm (4.438")	33.4 mm (1.313")	6.4 mm (.250")	87.3 mm (3.438")
CA55-577-2	CA55M-500	BT2-44-2		A2-59	53.0 mm (2.087")	27.0 mm (1.063")	43.0 mm (1.693")	104.8 mm (4.125")	3/8"	112.7 mm (4.438")	33.4 mm (1.313")	6.4 mm (.250")	87.3 mm (3.438")
CA55-577-3	CA55M-500	BT2-44-2			53.0 mm (2.087")	27.0 mm (1.063")	43.0 mm (1.693")	104.8 mm (4.125")	3/8"	112.7 mm (4.438")	33.4 mm (1.313")	6.4 mm (.250")	87.3 mm (3.438")
CA55-596	CA55M-500	BT2-27-027	1-1/4"	A2-61	68.3 mm (2.688")	30.2 mm (1.188")	63.5 mm (2.500")	104.8 mm (4.125")	3/8"	103.2 mm (4.063")	33.4 mm (1.313")	6.4 mm (.250")	87.3 mm (3.438")
CA596-2	CA55M-500	BT2-27-027	1-1/4"	A2-61-2	68.3 mm (2.688")	30.2 mm (1.188")	63.5 mm (2.500")	104.8 mm (4.125")	3/8"	103.2 mm (4.063")	33.4 mm (1.313")	6.4 mm (.250")	87.3 mm (3.438")
CA55-598	CA55M-500	AT2-27-2	1-1/4"	A2-61	68.3 mm (2.688")	30.2 mm (1.188")	63.5 mm (2.500")	104.8 mm (4.125")	3/8"	103.2 mm (4.063")	33.4 mm (1.313")	6.4 mm (.250")	87.3 mm (3.438")
CA55-598-2	CA55M-500	AT2-27-2	1-1/4"	A2-61-2	68.3 mm (2.688")	30.2 mm (1.188")	63.5 mm (2.500")	104.8 mm (4.125")	3/8"	103.2 mm (4.063")	33.4 mm (1.313")	6.4 mm (.250")	87.3 mm (3.438")
CA55-599-2	CA55M-500	BT2-27-6	1-1/4"	A2-61-2	68.3 mm (2.688")	30.2 mm (1.188")	63.5 mm (2.500")	104.8 mm (4.125")	3/8"	103.2 mm (4.063")	33.4 mm (1.313")	6.4 mm (.250")	87.3 mm (3.438")
CA55-756M	AB1-38	Mixer Only	N/A	A3-84	N/A	N/A	52.4mm (2 1/16")		3/8"			N/A	

 © IMPCO TECHNOLOGIES, INC.

MODEL 55-500L CARBURETOR

CARBURETORS & MIXERS

COMPONENTS

Item	Part	Description
1	S1-3	Screw, 10-24 x 5/8" SEMS (4)
2	See Table	Air Horn Adapter, Ref. to table in Acces.
3	G1-101	Gasket, air horn
4	S2-88	Spring, Idle Screw
5	S1-74	Screw, idle
6	NSS	Plug, 1/8" pipe
7	NSS	Body Assy
8	AV1 -14925*	Air Valve Assy (std.)
9	NSS*	Ring, Air Valve Sealing
10	S2-45	Spring, Air Valve
11	NSS*	Plate Assy
12	G1-92*	Gasket, Throttle Body to Mixer
13	P4-1	Piston, Idle Cutoff
14	NSS	Washer
15	S2-44	Spring, Idle Cutoff
16	S1-3	Screw, 10-24 x 5/8" SEMS (4)
17	S1-69	Screw, 1/4-28 x 5/16" (2)
18	NSS	Throat, 1/2" SAE flange
19	NSS	Pin, Throttle Stop
20	S1-22	Screw, 6-32 x 1/4" SEMS (2)
21	NSS	Butterfly, 19.1 mm (.750")
	NSS	Butterfly, 25.4 mm (1.000")
22	S5-6	Throttle Shaft, 6.4 mm (.250") dia.
23	B2-11	Bearing, Oilite, 6.4 mm (.250") ID. (2)
24	S3-8	Seal, 6.4 mm (.250") shaft (2)
25	R1-9	Ring, Seal Retainer (2)
26	AL1-8-1	Throttle Stop Assy., 6.4mm (.250") ID.
27	NSS	Throttle Stop Lever
28	S1-21	Stop Screw, 10-32 x 3/4"
29	S2-15	Spring, Idle Stop Screw
30	S1-18	Screw Pin, Throttle Stop
31	AL1-7-1	Throttle Lever w/Screw
32	NSS	Gasket, 1/2" SAE Flange
	Gl-16	Gasket, 3/4" SAE Flange
	Gl-17	Gasket, 1" SAE Flange
	G1-18	Gasket, 1-1/4" SAE Flange

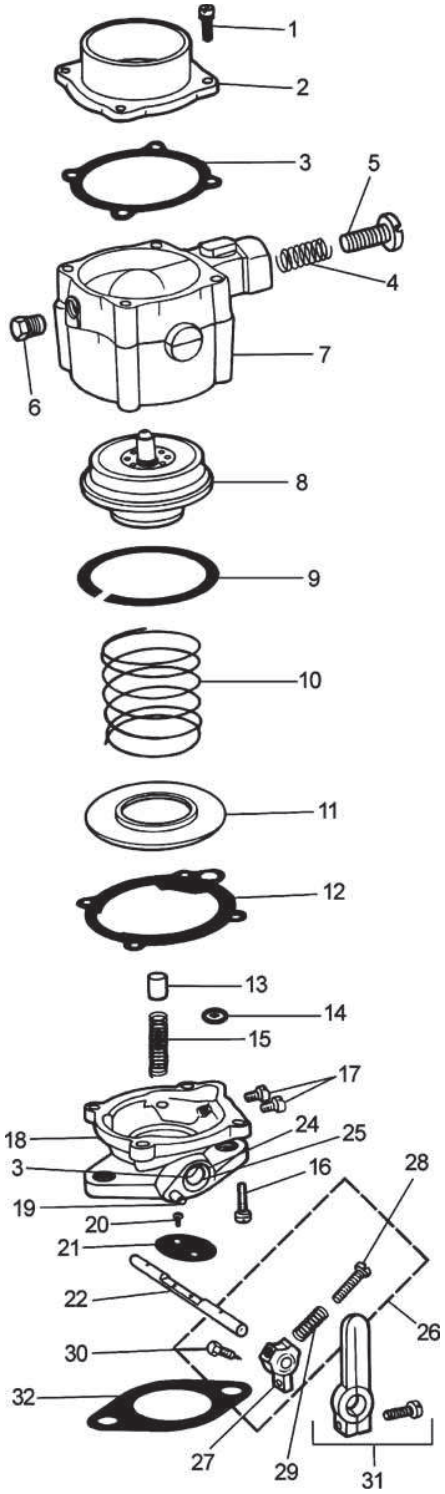

ASSEMBLIES & ACCESSORIES

MIXER ASSEMBLIES

MIXER	BODY ASSY	AIR/GAS VALVE	OVERALL WIDTH	OVERALL HEIGHT
CA55M-500	NSS	AV1-14925	104.8MM (4.125")	57.2MM (2.250")
CA55M-500-2	NSS	AV1-14926	104.8MM (4.125")	57.2MM (2.250")
CA55M-500-4	NSS	AV1-14925	104.8MM (4.125")	57.2MM (2.250")
CA55M-500-9	NSS	AV1-14925	104.8MM (4.125")	57.2MM (2.250")
CA55M-500	NSS	AV1-14925	104.8MM (4.125")	57.2MM (2.250")

THROTTLE BODIES

PART #	DESCRIPTION
AT2-25	3/4" SAE Flange 6.4mm (.250") shaft dia.
AT2-25-2	3/4" SAE Flange 6.4mm (.250") shaft dia. w/vacuum advance
AT2-26	1" SAE Flange 6.4mm (.250") shaft dia.
AT2-26-2	1" SAE Flange 6.4mm (.250") shaft dia. w/vacuum advance
AT2-27	1 1/4" SAE Flange 6.4mm (.250") shaft dia.
AT2-27-2	1 1/4" SAE Flange 6.4mm (.250") shaft dia. w/vacuum
AT2-27-4	1 1/4" SAE Flange 6.4mm (.250") shaft dia. w/AL1-7-3 & AS2-
AT2-44-577	Metric, 53.0mm (2.087") 1-1/16" bore, offset (modified)

AIR HORN ADAPTERS

PART #	DESCRIPTION
A2-36	38.1mm (1.500") dia.
A2-37	41.3mm (1.625") dia.
A2-38	47.6mm (1.875") dia.
A2-39	52.4mm (2.069") dia.
A2-41	58.8mm (2.310") dia.
A2-44	AF1-5 Air Cleaner to CA55-500 Series Adapter
A2-59	Adapter, Air Cleaner 1.69" OD
A2-61-2	Air Horn Adapt., tapped 8 mm
A2-65	Air Horn, Toyot 4Y CA55

LEVERS (See Lever Section for Other Lever Options)

PART #	DESCRIPTION
AL1-25-1	Assembly, Spring Loaded, Floating 6.4mm (.250") mounting
AL1-26-1	Assembly, Floating, 6.4mm (.250") mounting ID, 54.0mm
AL1-31	Assembly, Shaft Clamp, 6.4mm (.250") mounting ID, 49.2mm

RETURN SPRING ASSEMBLIES (OPTIONAL)

PART #	DESCRIPTION
AB4-23	Bracket Assy, Boden Wire: B4-23, C2-1, S1-8
S2-29	Spring/Loaded Lever

AIR CLEANER (OPTIONAL)

PART #	DESCRIPTION
AF1-5	Assy, 4.25 m3/min (150cfm), 171.5mm (6.750") OD., 60.3mm (2.374") high

THROTTLE SHAFTS

PART #	DESCRIPTION
S5-1	6.4mm (.250") diameter, 114.3mm (4.500") Long
S5-6	6.4mm (.250") diameter, 120.7 mm (4.7500") Long (standard)

NEEDLE BEARINGS

PART #	DESCRIPTION
B2-6	Bearing, Needle .438 x 250 x 312

 © IMPCO TECHNOLOGIES, INC.

MODEL CA55-750L MIXER

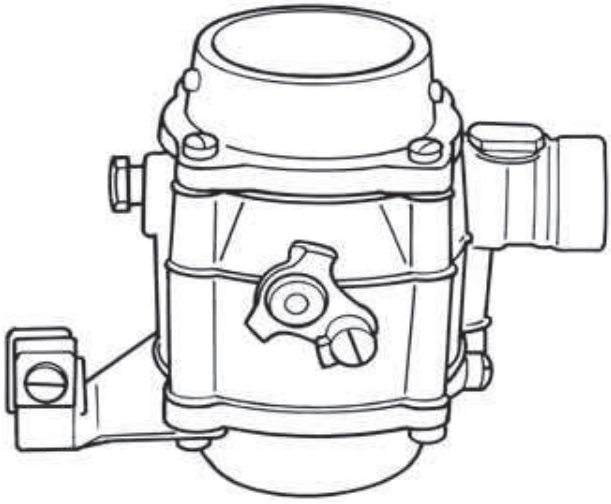

DESCRIPTION

The Model CA55-750L is a 118 CFM (59.0 L/s) bi-fuel mixer, suitable for engines from 1.5 to 73 hp (1 to 54 kW). The moveable air/valve assembly optimizes air flow for LPG Vapor or Natural Gas in gasoline bi-fuel applications. The flow-through design allows mounting in the inlet air stream. Various Air Horn sizes are available to suit individual applications.

SPECIFICATIONS

Fuel Type	LPG Vapor or Natural Gas, Bi-Fueled with Gasoline
Inlet Pressure	-1.5” w.c. (-0.37 kPa)
Operating Temperature Range	-40°F to +250°F (-40°C to +121°C)
Mounting Position	Vertical
Diaphragm Material	N/A
HP/kW Rating	Up to 73 hp (54 kW) @ 118 CFM (55.7 L/s) and 2.0” in Hg manifold depression

DIMENSIONS

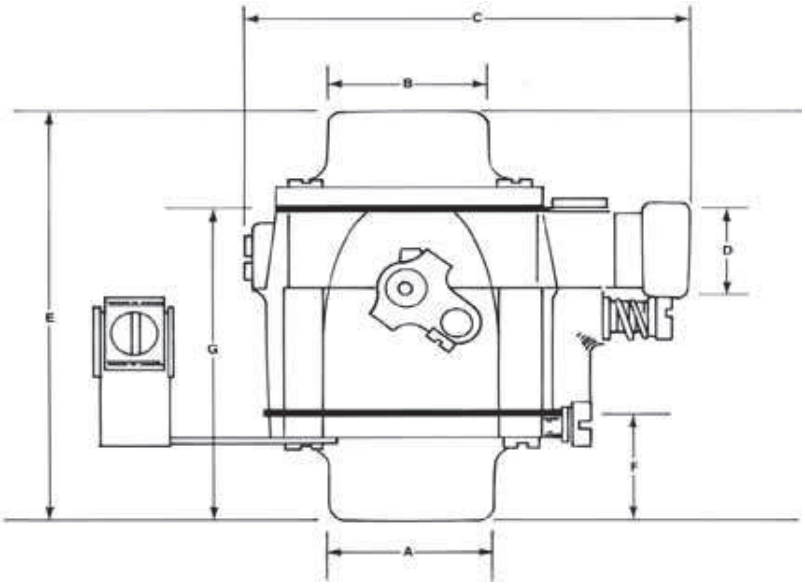

				A	B	C	D	E	F	G
STD. CARB	MIXER	HOSE ADAPTER	MIXER AIR HORN	HOSE ADAPTER DIA.	MIXER AIR HORN DIA.	OVERALL WIDTH	NPT FUEL INLET	OVERALL HEIGHT	HOSE ADAPTER HEIGHT	FLANGE TO AIR HORN FLANGE
CA55-754L	CA55M-750L	A3-83	A2-38	47.6 mm (1.875")	47.6 mm (1.875")	104.8 mm (4.125")	3/8"	104.8 mm (4.125")	25.4 mm (1.000")	79.4 mm (3.125")
CA55-756L	CA55M-750L	A3-84	NSS	52.4 mm (2.063")	52.4 mm (2.063")	104.8 mm (4.125")	3/8"	104.8 mm (4.125")	25.4 mm (1.000")	79.4 mm (3.125")
CA55-758L	CA55M-750L	NSS	A2-41	58.8 mm (2.313")	58.8 mm (2.313")	104.8 mm (4.125")	3/8"	104.8 mm (4.125")	25.4 mm (1.000")	79.4 mm (3.125")

 © IMPCO TECHNOLOGIES, INC.

MODEL 55-750L MIXER

CARBURETORS & MIXERS

COMPONENTS

ITEM	PART	DESCRIPTION
1	S1-3	Screw, 10-24 x 5/8" SEMS (4)
2	See Table	Air horn adapter (refer to table for proper size)
3	G1-101	Gasket air horn
4	S2-88	Spring, idle screw
5	S1-74	Screw, idle
6	NSS	Plug, 1/8"NPT
7	NSS	Body ass'y, complete w/lifter
8	AV1-14925*	Al valve ass'y
	NSS	Air valve ass'y (lean)
	NSS	Air valve ass'y (Europe)
9	NSS*	Ring, air valve sealing
10	NSS	Spring, air valve
	NSS	Spring, air valve (Europe)
11	NSS*	Plate ass'y
12	G1-92*	Gasket throttle body to mixer
13	S1-69	Screw, 1/4-28 x 5/16" (2)
14	NSS	Adapter, hose mounting, 38.1mm (15.00")
	NSS	Adapter, hose mounting, 41.3mm (16.25")
	A3-83	Adapter, hose mounting, 47.6mm(18.75")
	A3-84	Adapter, hose mounting, 52.4mm (20.63")
	NSS	Adapter, hose mounting, 58.8mm (23.13")
15	AB4-13	Bracket ass'y, Boden wire
16	S1-3	Screw, 10-24 x 5/8" SEMS (4)

*Included in Repair Kit

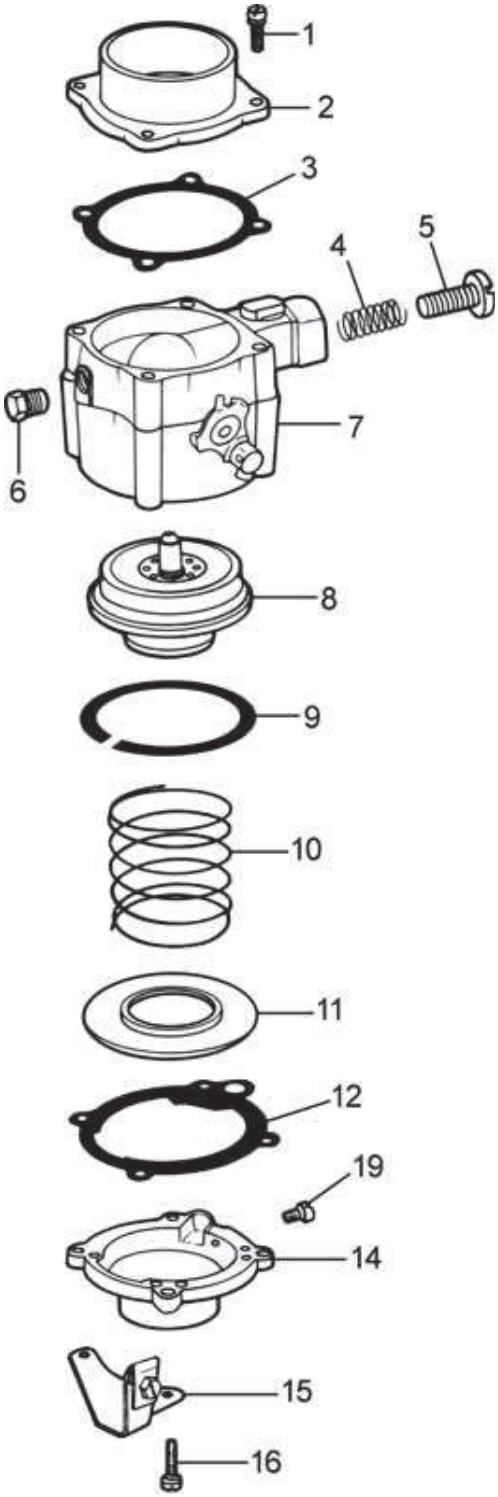

ASSEMBLIES & ACCESSORIES

MIXER ASSEMBLIES

Standard Mixer	Body Assy	Air/Gas Valve	Overall Width	NPT Fuel Inlet		Overall Height
CA55M-750L	NSS	AV1-14295	104.8 mm (4.125")	3/8	57.2mm (2.250)	

!

!

AIR HORN ADAPTERS

PART#	DESCRIPTION
A2-36	38.11mm (1.500") dia.
A2-37	41.3 mm (1.625") dia.
A2-38	47.6 mm (1.875") dia.
A2-39	52.4 mm (2.063") dia.
A2-41	58.8 mm (2.313") dia.
A2-44	AF1-5 air cleaner to CA55-500 Series adapter

AIR CLEANERS (OPTIONAL)

PART#	DESCRIPTION
AF1-5	Assy 4.25 m3/min (150 cfm), 171.5 mm (6.750") O.D. 60.3 mm (2.375") high

!

!
!
!
!
!
!
!
!
!
!
!
!
!
!
!
!
!
!
!
!
!
!
!
!

 © IMPCO TECHNOLOGIES, INC.

CA55 MIXERS & CARBURETORS

CA55 SERIES 90° AIR HORN CARBURETORS

PART#	DESCRIPTION
CA55-0258	Carb. Ass'y Lean
CA55-14	Carb, 1" SAE flange 1 -1/2' Air Horn
CA55-20	Carb, 1" SAE flange 1-5/8" Air Horn
CA55-20-2	Carb, 1" SAE flange 1-5/8" Air Horn, lean air gas valve ass'y.
CA55-256L	Carb, 1-7/8" Air Horn, 1-7/8" hose, dual fuel, w/ lifter
CA55-258	Carb, 2-1/16" hose, 2-1/16" Air Horn w/o lifter
CA55-258L	Carb, 2-1/16" Air Horn, 2-1/16" hose, dual fuel, w/ lifter
CA55-271	Carburetor
CA55-4	Carb, 3/4" SAE flange, 1-5/8" Air Horn
CA55-40	Carb,1" SAE flange, 2-1/16" Air Horn
CA55-6	Carb, 1" SAE flange, 1-7/8" Air Horn
CA55-64	Carb, 1" SAE flange, 1-5/8" Air Horn, w/ 1/4" hole in lever at 1"R, 4" shaft
CA55-66	Carb, 1" SAE flange, 1-5/8" Air Horn, w/ 1/4" hole in lever at 1"R, 4" shaft
CA55-8	Carb, 1-1/4" SAE flange, 2-1/16" Air Horn

CA55 SERIES 90° AIR HORN MIXERS

PART#	DESCRIPTION
CA55M-2	Mixer, 1-5/8" Air Horn HDTM
CA55M-3	Mixer, 1-3/4" Air Horn Black
CA55M-4	Mixer, 1-7/8" Air Horn HDTM
CA55M-5	Mixer Ass'y Model CA55M

CA55 SERIES STRAIGHT DRAFT CARBURETORS

PART#	DESCRIPTION
CA55-503	Carb, 1-1/4" SAE flange, 2-1/4" Air Horn, with drilled shaft
CA55-508	Carb. 1-1/4 SAE 1-2/16 HDTM
CA55-510	Carb, 1-1/4" SAE flange, 2-5/16" Air Horn
CA55-524	Carb, 1" SAE flange, Toyota
CA55-542	Carb, 1" SAE flange, Toyota
CA55-553	Carb, 1" SAE flange, w/ A2-65 & A3-113
CA55-553-2	Carb, 1" SAE flange, w/ A2-65 & A3-113 adapters, lean flow, Toyota
CA55-576	Carb, Hyster special flange, 43 mm Air Horn, short lever w/ throttle return
CA55-577	Carb, 53 mm flange, 43 mm Air Horn, standard flow
CA55-577-2	Carb, 53 mm flange, 43 mm Air Horn, lean flow
CA55-577-3	Carb, 53 mm flange, 43 mm Air Horn, lean flow
CA55-596	Carb, 1-1/4" SAE flange, A2-61 Air Horn
CA55-596-2	Carb, 1-1/4" SAE flange, A2-61 Air Horn w/Tapped A/H 8 mm
CA55-598	Carburetor Assy
CA55-598-2	Carb, W/A2-61-2 HTDM LPG
CA55-599-2	HTDM Carb, 1-1/4" SAE flange, 2-1/4" Air Horn, tapped 8 mm less levers
CA55-756L	Carb, 2-1/16" Air Horn, 2-1/16" hose, dual fuel,
CA55-758L	Mixer, 2-5/16" Air Horn, 2-5/16 hose, dual fuel, with lifter

CA55 SERIES STRAIGHT DRAFT MIXERS

PART#	DESCRIPTION
CA55M-500-2	Series 500, straight draft mixer with lean air/gas valve ass'y.
CA55M-500-4	Series 500, straight draft mixer with lean body, lean full range
CA55M-500-9	Series 500, straight draft mixer with lean body, WOT
CA55M-750L	Series 500, straight draft mixer assembly with lifter, dual fuel

 © IMPCO TECHNOLOGIES, INC.

MODEL 60 MIXER

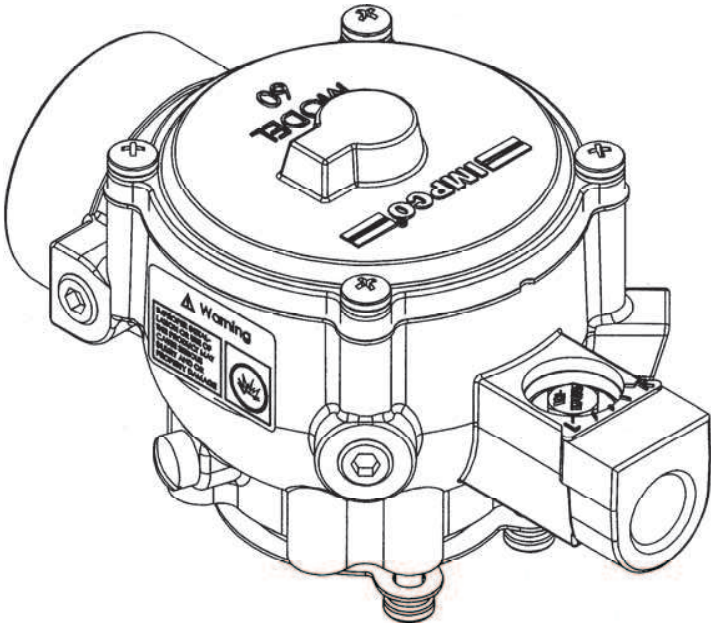

DESCRIPTION

The IMPCO Model 60 is an air-gas valve/diaphragm mixer designed to fit engines from 79 to 183 cubic inches (1.3 to 3 liters) in displacement and up to 95 CFM (44.8 L/s) air flow. It is a 90° air horn design available with a 2.06 inch (52.4mm) air horn and fits most current CA100 throttle bodies and adapters. It can also be used in-line, separate from the throttle body.

The mixer comes in two configurations: the CT version for open-loop engine applications without an electronic engine controller, and the FT version for use with the IMPCO Commander digital closed-loop fuel controller. Custom flow specifications for the mixer can be set and sealed at the factory.

Tamper resistant plugs are available for installation by your technicians after the IMPCO Model 60 mixer has been adjusted at your facility to fit your application.

SPECIFICATIONS

Fuel Type	LPG Vapor or Natural Gas, Bi-Fueled with Gasoline
Inlet Pressure	-1.5! w.c. (-0.37 kPa)
Operating Temperature Range	-40°F to +250°F (-40°C to +121°C)
Mounting Position	Vertical
Diaphragm Material	Silicone
HP/kW Rating	Up to 73 hp (1 to 53 kW) @ 95 CFM (44.8 L/s) and 2.0! in Hg manifold depression

DIMENSIONS & COMPONENTS

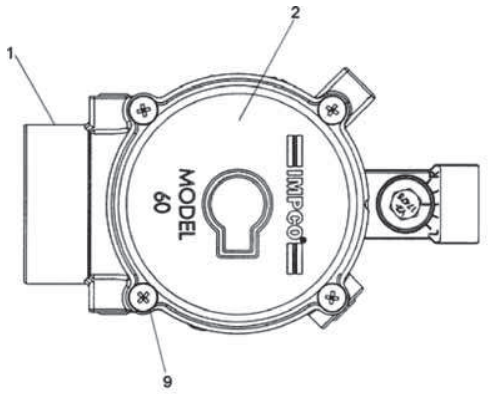

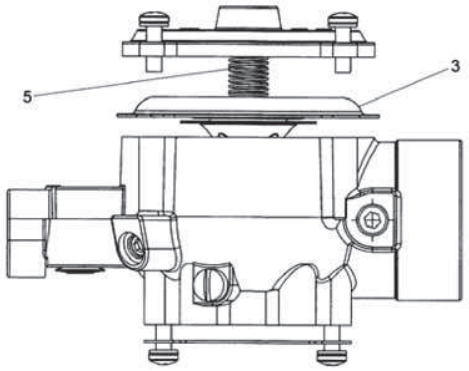

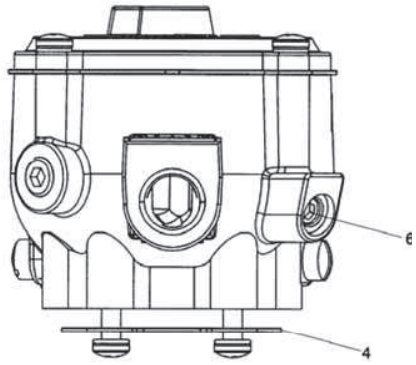

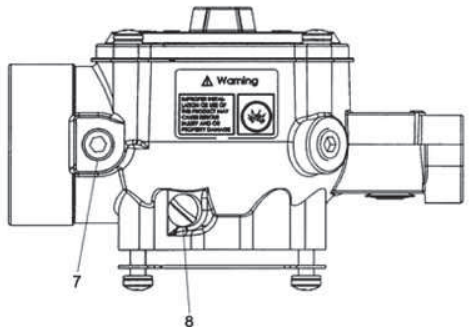

MODEL 60 MIXER PART NUMBERS

PART#	DESCRIPTION
FT60M-3	Feedback, 2.06" Air Horn
CT60M-3	Open-Loop, 2.06" Air Horn

ITEM #	PART #	DESCRIPTION
1	NSS	Body, 60 Series Mixer Assembly
2	NSS	Cover, 60 Series Mixer
3	AV1-25590 AV1-30115	Air/Gas Valve Assembly Air/Gas Valve Assembly
4	G1-11	Gasket, Throttle Body to Mixer
5	S2-35-1	Spring, Secondary (Blue Stripe)
6	NSS	Screw, M8 x 1.25 Idle Adjust
7	NSS	Plug, Set Screw
8	S1-69	Screw, 1/4"-28 x 5/16"
9	NSS	Screw, M5 x .8 x 16mm Long

DIMENSIONS

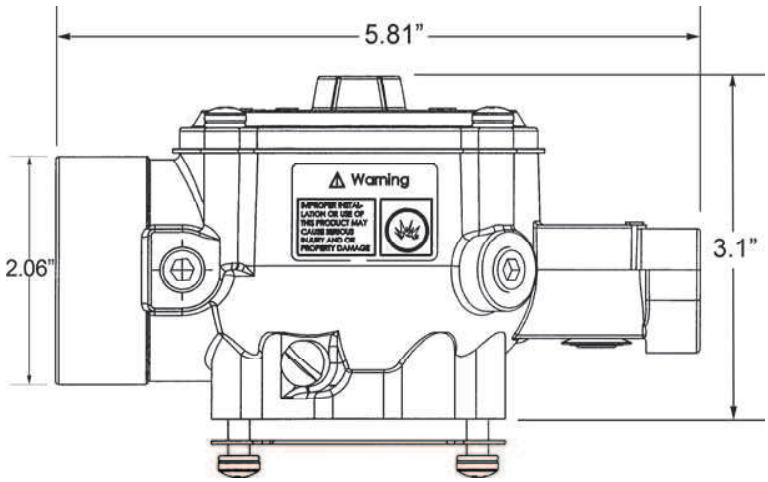

 © IMPCO TECHNOLOGIES, INC.

COMPONENTS

CARBURETOR

PART#	DESCRIPTION
CT60-30673	2.06" Air Horn w/BT2-23-30682 Throttle Body for Hyster 2.0L Upgrade Kit

THROTTLE BODIES

PART#	DESCRIPTION
AT2-1	3/4" SAE flange, 6.4mm (0.25) shaft dia.
AT2-2	1" SAE flange, 6.4mm (0.25) shaft dia.
AT2-2-5	1" SAE flange, 6.4mm (0.25") shaft dia., w/ vacuum advance
AT2-3	1-1/4" SAE flange, 8.0mm (0.31") dia.
AT2-3-8	1-1/4" SAE flange, 8.0mm (0.31") shaft dia. w/vacuum advance
AT2-4-1	1-1/2" SAE flange, 8.0mm (0.31") shaft dia
AT2-4-3	1-3/4" SAE flange, 8.0mm (0.31") shaft dia
AT2-4-6	1-3/4" ASE flange, 8.0mm (0.31") shaft dia., w/needle bearings
AT2-16-1	1-1/4" to 1-1/2" SAE flange, 8.0mm (0.31") shaft dia., no vacuum advance
AT2-16-4	1-1/4" to 1-1/2" flange, 8.0mm (0.31") shaft dia., w/needle bearings & vacuum port
AT2-23	1-1/4" SAE flange, 8.0mm (0.31") dia.
AT2-23-4	1-1/4" SAE flange, 8.0mm (0.31") shaft dia.

Note: The above throttle bodies are offset.

AIR/GAS VALVE ASSEMBLIES

PART#	DESCRIPTION
AV1-30115	Air/Gas Valve Assy, Silicone FT Series
AV1-25590	Air/Gas Valve Assy, Silicone CT Series

ADAPTERS

Part#	DESCRIPTION
AA3-29-1	Adapt. 100M to 2-1/16" hose
AA3-29-2	Adapt.100M to 2-1/16" hose, 12-24 Thrtl Bodies
AA3-32-1	Adapt.100M to IMPCO 2B throttle body
AA3-43	Adapt.100M to Toyota lift truck throttle body
AA3-49	Adapt.100M to Datsun C5-P5 Nikki throttle body
AA3-50	Adapt.100M to Datsun C3-P3 throttle body
A3-58	Adapt.100M to throttle body, offset 11.1mm (0.44")
A3-67	Adapt.100M to Mitsubishi lift truck throttle body

GASKETS

Part#	DESCRIPTION
416	Gasket, Flange 1-1/4" SAE TB60

BEARINGS

Part#	DESCRIPTION
1-5022	Bearing, Throttle Shaft
1-5019	Bearning, Throttle Shaft 1/4"

RETURN SPRING ASSEMBLIES

Part#	DESCRIPTION
AS2-50-1	Throttle return, 6.4mm (0.25") shaft
AS2-50-2	Throttle return, 8.0mm (0.31") shaft

BRACKET ASSEMBLIES

Part#	DESCRIPTION
AB4-2	Bracket, Boden Wire
AB4-19	Bracket, AS2-50-2Throttle Return Spring

FUEL CONTROLLERS

Part#	DESCRIPTION
EK-CDP-1	Commander Kit
EKCDP-1DX-4	Kit, Microprocessor 4 Cyl.
CDP-1DX-6	Kit, Microprocessor 6 Cyl.

LEVERS

Part#	DESCRIPTION
AL1-7-1	Assy, 44.5mm (1.75") long (st. on AT2-3, AT2-4-1, AT2-4-3, AT2-16-1)
AL1-7-2	Assy, w/ 6.4mm (0.25") ball stud, 44.5mm (1.75") long
AL1-7-3	Assy, 33.3mm (1.31") long (std on AT2-1, AT2-2, AT2-2, AT2-23)
AL1-7-4	Assy, w/swivel, 44.5mm (1.75") long
AL1-7-5	Assy, w/Wisconsin swivel, 6.4mm (0.25") mounting ID, 20.6mm (0.81") long
AL1-8-1	Stop assy, 6.mm (0.25") mounting ID, 19.1mm (0.75") long (std. on AT2-1, AT2-2)
AL1-8-2	Stop assy, 8.0mm (0.31") mounting ID 19.1mm (0.75") long (std. on AT2-3, AT2-4-1, AT2-4-3, AT2-161, AT2-23).
AL1-25-1	Assy, spring loaded, flating, 6.4mm (0.25") mounting ID, 34.9mm (1.38" long w/ AC2-14-1)
AL1-25-2	Assy, spring loaded, flating, 6.4mm (0.31") mounting ID, 34.9mm (1.38" long w/ AC2-14-2)
AL1-26-1	Assy, flating 6.4mm (0.25") mounting ID, 54.0mm (2.13") long, w/AC2-11
AL1-26-2	Assy floating, w/swivel, 6.4mm (0.25") mounting ID 54.0mm (2.12") long, w/ AC2-11
AL1-27-1	Assy floating 8.0mm (0.31" mounting ID, 54.0mm (2.13") long w/AC2-12
AL1-27-2	Assy, floating w/swivel, 8.0mm (0.31") mounting ID 54.0mm (2.13") long, w/AC2-12
AL1-31	Assy, shaft clamp, 6.4mm (0.25") mounting ID 49.2mm (1.94") long
AL1-33	Assy shaft clamp, 8.0mm (0.31") mounting ID 49.2mm (1.94") long
AL1-46	Assy steel shaft clamp, 8.0mm (0.31") mounting ID, 47.6mm (1.88") long

 © IMPCO TECHNOLOGIES, INC.

MODEL CA100 CARBURETOR

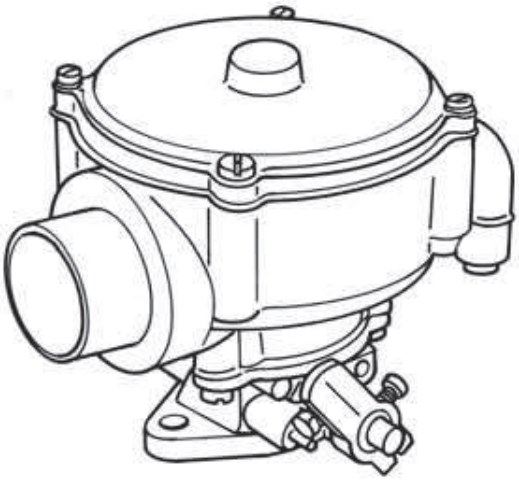

DESCRIPTION

The Model 100 is a single diaphragm air-gas valve carburetor/mixer. It offers a 90 degree air inlet to provide low overhead clearance, and is available with several Air Horn and throttle body options. This unit is available for LPG Vapor and Natural Gas applications with air flow requirements up to 197 CFM (93 L/s). The Model 100 is also available for feedback applications with the !FB" designation.

The 100 mixer provides a convenient 1/8 NPT balance port and two separate air valve vacuum ports. Additional low speed, idle mixture control can be obtained to lean air/fuel mixtures through the use of optional shims.

SPECIFICATIONS

Fuel Type .....LPG Vapor or Natural Gas
Inlet Pressure .....-1.5#w.c. (-0.37 kPa)
Operating Temperature Range .....-40°F to +250°F (-40°C to +121°C)
Mounting Position.....Vertical
Diaphragm Material.....Hydrin or Silicone
HP/kW Rating.....123 HP (91.7 kW) @ 197 CFM (93 L/s) and 2.0#in Hg manifold depression

DIMENSIONS

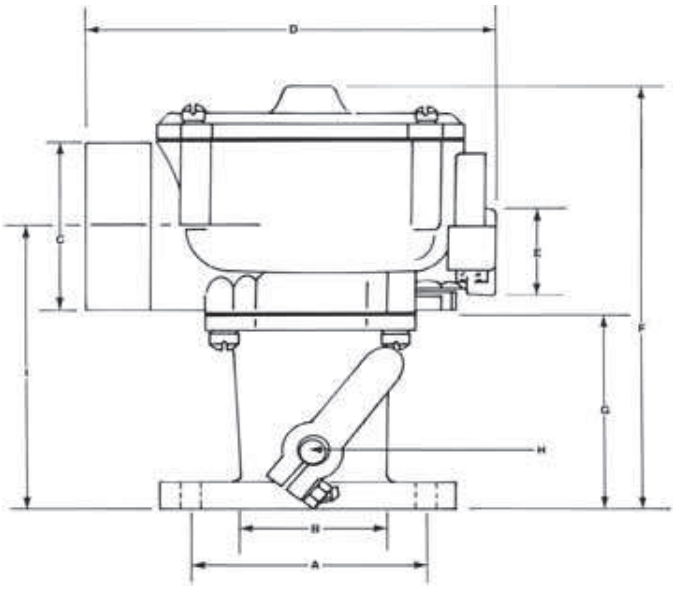

STD.CARB	MIXER	THROTTLE BODY	SAE FLANGE	A CTR. TO CTR. BOLT SPACING	B BORE	C MIXER AIR HORN DIA.	D OVERAL L WIDTH	E NPT INLET	F OVERALL HEIGHT	G THROTTLE BODY HEIGHT	H THROTTLE SHAFT DIA.	I FLANGE TO CTR. OF AIR HORN
CA100-6	CA100M-2	AT2-2	1"	60.3MM (2.375")	30.2MM (1.188")	47.6MM (1.875")	131MM (5.156")	1/2"	117MM (4.625")	38.5MM (1.438")	6.4MM (0.250")	67.0MM (2.64")
CA100-8	CA100M-3	AT2-3	1-1/4"	68.3 mm (2.688")	36.5 mm (1.438")	52.4 mm (2.063")	131 mm (5.156")	1/2"	150.4 mm (5.92")	69.1 mm (2.719")	8.0 mm (0.313")	99.6 mm (3.92")
CA100-10	CA100M-4	AT2-3	1-1/4"	68.3 mm (2.688")	36.5 mm (1.438")	58.8 mm (2.313")	131 mm (5.156")	1/2"	150.4 mm (5.92")	69.1 mm (2.719")	8.0 mm (0.313")	99.6 mm (3.92")
CA100-12	CA100M-4	AT2-4-1	1-1/2"	74.6 mm (2.938")	42.9 mm (1.688")	58.8 mm (2.313")	131 mm (5.156")	1/2"	150.4 mm (5.92")	69.1 mm (2.719")	8.0 mm (0.313")	99.6 mm (3.92")
CA100-35	CA100M-4-2	AT2-4-1	1-1/2"	74.6 mm (2.938")	42.9 mm (1.688")	58.8 mm (2.313")	131 mm (5.156")	1/2"	150.4 mm (5.92")	69.1 mm (2.719")	8.0 mm (0.313")	99.6 mm (3.92")
CA100-46	CA100M-4	AT2-4-3	1-3/4"	84.1 mm (3.313")	42.9 mm (1.688")	58.8 mm (2.313")	133mm (5.25")	1/2"	150.4 mm (5.92")	71.4 mm (2.813")	8.0 mm (0.313")	102 mm (4.01")
CA100-64	NSS	AT2-23	1-1/4"	68.3 mm (2.688")	36.5 mm (1.438")	52.4 mm (2.063")	131 mm (5.156")	1/2"	116.3 mm (4.58")	34.9 mm (1.375")	8.0 mm (0.313")	65.5mm (2.58")
CA100-64G	CA100M-3	N/A	-	8.0mm (3.155")	Custom	52.4 mm (2.063")	131 mm (5.156")	1/2"	111mm (4.37")	N/A	N/A	60.2mm (2.37")
CA100-66	CA100M-4	AT2-4-1	1-1/2"	74.6 mm (2.938")	42.9 mm (1.688")	58.8 mm (2.313")	131 mm (5.156")	1/2"	150.4 mm (5.92")	69.1 mm (2.719")	8.0 mm (0.313")	99.6 mm (3.92")

 © IMPCO TECHNOLOGIES, INC.

DIMENSIONS (CONTINUED)

				A	B	C	D	E	F	G	H	I
STD. CARB	MIXER	THROTTLE BODY	SAE FLANGE	CTR. TO CTR. BOLT SPACING	BORE	MIXER AIR HORN DIA.	OVERALL WIDTH	NPT INLET	OVERALL HEIGHT	THROTTLE BODY HEIGHT	THROTTLE SHAFT DIA.	FLANGE TO CTR. OF AIR HORN
CA100-90	CA100M-4	AT2-16-4	1.25-1.5"	71.6mm (2.82")	42.9mm (1.688")	58.8mm (2.313")	131mm (5.156")	1/2"	122.7mm (4.83")	41.3mm (1.625")	8.0mm (0.313")	71.9mm (2.83")
CA100-108	NSS	AT2-23-6	1.25"	68.3mm (2.688")	36.5mm (1.438")	52.4 mm (2.063")	131mm (5.156")	1/2"	116.3 (4.58")	34.9MM (1.375")	8.0MM (0.313")	67.06MM (2.64")
CA100-110	CA100M-3	NSS	1"	60.3MM (2.688")	30.2MM (1.188")	52.4mm (2.063")	131mm (5.156")	1/2"	117mm (4.625")	36.5mm (1.438")	6.4mm (0.250")	67.06mm (2.64")
CA100-112	CA100M-3	NSS	1.25"	68.3 mm (2.688")	36.5mm (1.438")	52.4mm (5.156")	131mm (5.156")	1/2"	116.3MM (4.58")	34.9MM (1.375")	8.0MM (0.313")	65.53MM (2.58")
CA100-124-2	CA100M-4	AT2-2-7	1"	60.3MM (1.188")	30.2MM (1.188")	58.8MM (2.313")	131mm (5.156")	1/2"	117 mm (4.625")	36.5 mm (1.438")	6.4mm (0.250")	67.06mm (2.64")
CA100-134	CA100M-3	NSS	1"	60.3MM (1.188")	30.2MM (1.188")	52.4mm (5.156")	131mm (5.156")	1/2"	117 mm (4.625")	36.5 mm (1.438")	6.4mm (0.250")	67.06mm (2.64")
CA100-136	CA100M-3	AT2-23-141	1.25"	68.3mm (2.688")	36.5mm (1.438")	52.4mm (2.063")	131mm (5.156")	1/2"	116.3 (4.58")	34.9 (1.375")	8.0MM (0.313")	67.06MM (2.64")
CA100-138	CA100M-3	NSS	l"	60.3MM (2.375")	30.2MM (1.188")	52.4 mm (1.188")	131mm (5.156")	1/2"	117 mm (4.625")	36.5 mm (1.438")	6.4mm (0.250")	67.06mm (2.64")
CA100-139	CA100M-3	NSS	1"	68.3mm (2.688")	36.5mm (1.438")	52.4mm (2.063")	131mm (5.156")	1/2"	117 mm (4.625")	36.5 mm (1.438")	6.4mm (0.250")	67.06mm (2.64")
CA100-180	NSS	AT2-23-849	1.25"	68.3mm (2.688")	36.5mm (1.438")	52.4mm (2.063")	131mm (5.156")	1/2"	116.3mm (4.58")	36.5 mm (1.438")	6.4mm (0.250")	67.06mm (2.64")
CA100-245	NSS	NSS		72.3mm (2.82")	42.2mm (1.66")							
CA100-272	CA100M-3	AT2-23-6	1.25"	68.3 mm (2.688")	36.5mm (1.438")	52.4mm (2.063")	131mm (5.156")	1/2"	116.3mm (4.58")	34.9MM (1.375")	8.0MM (0.313")	65.53MM (2.58")
CA100-183	N/A	NSS		74.68mm (2.94")	30.99mm (1.22")	52.32mm (2.06")	100.33mm (3.95")	1/2"	134.62mm (5.30")	41.45mm (1.62")	8.0MM (0.313")	82.55mm (3.25")

COMPONENTS

ITEM#	PART#	DESCRIPTION
1	S1-3	Screw, 10-24 x 5/8" SEMS (4)
2	C1-17	Cover
3	S2-85	Spring, air valve
4	S1-22	Screw, 5-32 X 1/4" SEMS (4)
5	P2-22	Plate, backup
6	D1-17	Diaphragm
	D1-17-2	Diaphragm, Silicone
7	R1-19	Ring, air valve
8	!!	"#$%&'()*
9	AV1-14	Air Gas Valve Assy, Complete
	AV1-14-2-962	Air Valve 30/35
10	AB1-8-4	Body, CA100M & 110M 2-5/6" AH
11	S1-69	Screw, 1/4-28 x 5/16" (2)
12	S1-74	Screw Idle
13	S2-88	Spring, Idle Screw
14	NSS	Plug, 1/8 NPT
15	G1-11	Gasket, Throttle Body to Mixer
16	S1-19	Screw, 12-24 x 5/8" SEMS (4)
17	NSS	Throttle Body
18	NSS	Pin, Throttle Stop (2)
19	S5-1	Throttle shaft, 6.4 mm (0.25") dia.
20	NSS	Fly, 19.1mm (0.75")
	NSS	Fly, 25.4mm (1.00")
	NSS	Fly, 31.8mm (1.25")
	NSS	Fly, 38.1mm (1.50")
21	NSS	Screw, 6-32 x 1/4" SEMS (2)
22	B2-11	Bearing Oilite, 6.4mm (0.25") I.D. (2)
	B2-12	Bearing Oilite, 8.0mm (0.31") I.D. (2)
	NSS	Bearing Needle, 8.0mm (0.31) I.D. Opt.
23	S3-8	Seal, 6.4mm (0.25") shaft (2)
	S3-9	Seal, 8.0 mm (0.31") shaft (2)
	S3-25	Seal, internal, 8.0 mm (0.31") I.D., Opt.
24	R1-9	Ring, Seal Retainer
25	AL1-8-1	Throttle Stop ass'y, 6.4 mm (0.25") I.D.
	AL1-8-2	Throttle Stop ass'y, 8.0 mm (0.31") I.D.
26	NSS	Throttle Stop Lever, 6.4mm (0.25") I.D.
27	S1-21	Stop screw, 10-32 x 3/4"
28	S2-15	Spring, Idle Stop Screw
29	S1-18	Pin, Screw, Throttle Stop
30	NSS	Throttle Lever, Short w/Screw
	NSS	Throttle Lever, Long w/Screw
31	G1-16	Gasket, 19.1 mm (0.75") Flange
	G1-17	Gasket, 25.4 mm (1.00") Flange
	+,-,.	+'/0*12%3('45*%,-,678%!"9
	NSS	Gasket, 31.8 mm (1.25") Flange

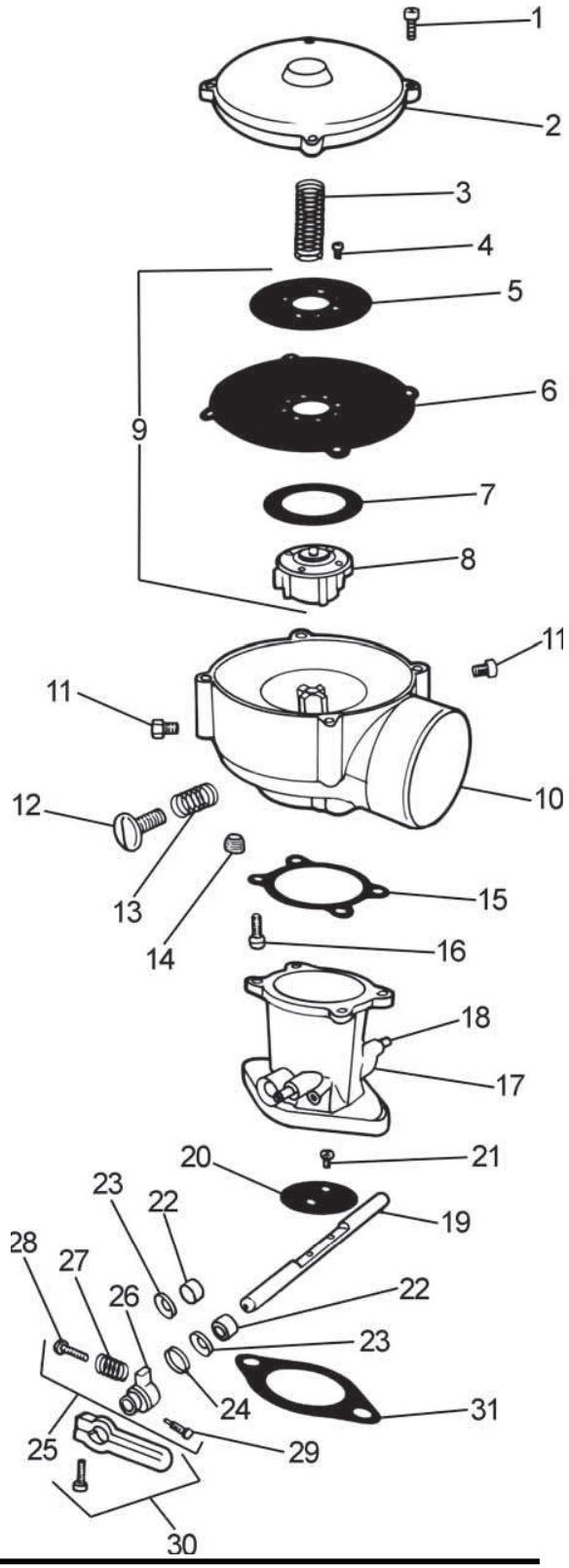

 © IMPCO TECHNOLOGIES, INC.

ASSEMBLIES & ACCESSORIES

CA100 CARBURETORS

PART#	DESCRIPTION
CA100-10	Carb, 1-1/4" SAE flange, 2-5/16" Air Horn, lean flow
CA100-108	Carb, 1-1/4" SAE flange (short), 2-1/16" Air Horn, lean flow, low profile
CA100-110	Carb, 1" SAE flange, 2-1/16" Air Horn, drilled shaft, AL1-26-401
CA100-112	Carb, 1-1/4" SAE flange, 2-1/16" Air Horn, lean flow, short shaft
CA100-12	Carb, 1-1/2" SAE flange, 2-5/16" Air Horn
CA100-124-2	Carb. 1" x 2-1/16" Air Horn AT2-2
CA100-134	Carb, 1" SAE flange, 2-1/16" Air Horn, lean flow
CA100-136	Carb, 1-1/4" SAE flange, 2-1/16" Air Horn
CA100-138	Carb, 1" SAE flange, 1-1/16" Air Horn, Yale
CA100-139	Carb, 1" SAE flange, 2-1/16" Air Horn w/ bracket & swivel
CA100-180	Carb, 1-1/4" SAE flange, 2-1/16" Air Horn w/ L1-33, Clark
CA100-183	Carburetor Ass'y
CA100-194	Carb, AA3-67 adapter, 2-1/16" Air Horn, Clark
CA100-270	Carb Assy 1-1/4 X 2-1/16 Wis-Co
CA100-272	Carb, 1-1/4" SAE flange, 2-1/16" Air Horn, 100% flow, low caterpillar
CA100-35	Carb, 1-1/2" SAE flange, 2-5/16" Air Horn, AL1-7-1 lever, silicone dia.
CA100-46	Carb, 1-3/4" SAE flange, 2-5/16" Air Horn
CA100-498	Carb. Ass'y NAACO (1389498)
CA100-6	Carb. 1" x 1 7/8"
CA100-621	Carb. 2-5/16 Air Horn, Mazda 2.2L, Yale
CA100-64	Carb, 1-1/4" SAE flange (short), 2-1/16" Air Horn
CA100-64G	Carb, 2-1/6" Air Horn, 70/75 flow, no throttle ass'y.
CA100-66	Carb, 1-1/2" SAE flange, 2-5/16" Air Horn, 72/80 flow 1-1/4" SAE flange, 2-5/16" Air Horn, 72/80 flow, low profile
CA100-7108	Carburetor Ass'y (2817108)
CA100-8	1-1/4" SAE flange, 2-1/16" Air Horn
CA100-90	1-1/4" SAE flange, 2-5/16" Air Horn, lean flow, long shaft
CA100-91A	Carburetor Ass'y

MIXERS

PART#	DESCRIPTION
CA100M-1	38.1mm (1.50") Air Horn
CA100M-2	47.6mm (1.88") Air Horn
CA100M-2-2	47.6mm (1.88") Air Horn Silicone
CA100M-3	52.4mm (2.06") Air Horn
CA100M-3-2	52.4mm (2.06") Air Horn Silicone
CA100M-3-9	Mixer Assembly
CA100M-4	58.7mm (2.31") Air Horn
CA100M-4-2	58.7mm (2.31") Air Horn Silicone
CA100M-4-9	58.7mm (2.31") Air Horn Special
CA100M-5	41.3mm (1.63") Air Horn
FB100M-4	58.7mm (2.31") Air Horn for Feeback
CA100M-636	Mixer Ass'y Clark (2802636)

THROTTLE BODIES (STANDARD)

PART#	DESCRIPTION
AT2-1-5	3/4" SAE Flange, 6.4mm (0.25") Shaft Dia. w/vacuum
AT2-2	1" SAE flange, 6.4mm (0.25') Shaft dia.
AT2-2-5	1" SAE flange, 6.4mm (0.25') Shaft dia. w/vacuum
AT2-2-6	Throttle Assy 1" Long Shaft
AT2-3	1-1/4" SAE flange, 8.0mm (0.31") dia.
AT2-3-8	1-1/4"SAE Flange, 8.0mm (0.31") dia. Shaft w/vacuum
AT2-4-1	1-1/2" SAE flange, 8.0mm (0.31") Shaft dia.
AT2-4-3	1-3/4" SAE flange, 8.0mm (0.31") Shaft dia.
AT2-16-1	1-1/4" to 1-1/2" SAE flange, 8.0mm (0.31") Shaft dia.,
AT2-16-2	1-1/4" to 1-1/4" SAE flange, 8.0mm w/S5
AT2-16-4	1-1/4" to 1-1/2" SAE flange, 8.0mm (0.31") Shaft dia. w/needle bearings
AT2-23	1-1/4" SAE flange, 8.0mm (0.31") Shaft dia.
AT2-23-4	1-1/4" SAE flange, 8.0mm (0.31") dia.
AT2-23-5	Throttle Body 1 - 1/4 w/S5-11
AT2-23-6	Throttle Body 1 - 1/4 w/T1-17
AT2-23-7	T/B w/T2-23 Tapped (LP Gas)

AIR GAS VALVES

PART#	DESCRIPTION
AV1-14	Standard, w/Hydrin Diaphragm, LPG
AV1-14-12	Air Valve Assy
AV1-14-2-838	Air Gas Valve, 30/35 Clark
AV1-14-3	Standard, w/Silicone Diaphragm, LPG
AV1-14-76-2	Air Valve With Silicone 61/68
AV1-14-9-2	Air Valve Ass'y, w/2 Check Valve
AV1-14-2	Lean, w/Hydrin Diaphragm, LPG
AV1-14-220-2	w/Silicone Diaphragm, LPG, for non-Feedback
AV1-1447-2	For standard feedback, w/ silicone diaphragm
AV1-25413	Valve Assembly, Gas Air
AV1-14-12-2	Air Valve Assy, Silicone
AV1-14-4	Lean, w/Silicone Diaphragm, LPG
CV1-14	Air Gas Valve Ass'y,
CV1-14-2	Special lean, w/ silicone diaphragm
EV1-14-2	w/ 42 valve & silicone diaphragm
EV1-14-9	Air Gas Valve V2 for CA100M-636

ASSEMBLIES & ACCESSORIES (CONTINUED)

CLAMP

PART#	DESCRIPTION
AC2-29	Clamp Ass'y, CA125-76

GOVERNOR

PART#	DESCRIPTION
AD1-85	Diaphragm Assy, Throttle Governor

RING SPACER SPACERS (OPTIONAL)

PART#	DESCRIPTION
R1-29	Ring, air valve spacer, AV1-14 (to lean idle mixtures

THROTTLE SHAFTS

PART#	DESCRIPTION
S5-1	6.4mm (0.25") dia. 114mm (4.50") long (stud on AT2-1, AT2-2)
S5-2	8.0mm (0.31")dia. 127mm (5.00") long (std on AT2-3, AT2-4-1, AT2-4-3, AT2-16-1, AT2-23)
S5-6	6.4mm (0.25") dia., 121mm (4.75") long
S5-7	8.0mm (0.31") dia., 133mm (5.25") long
S5-11	8.0mm (0.31") dia., 133mm (6.13") long

ADAPTERS

PART#	DESCRIPTION
AA3-29-1	100M to 2-1/16" hose
A3-29-2	100M to 2-1/16" hose, tapped 12-24
A3-31	100M to 2-1/4" hose
AA3-32-1	100M to IMPCO 2B throttle body
AA3-43	100M to Toyota lift truck throttle body
AA3-49	100M to Datsun C5-P5 Nikki throttle body
AA3-50	100M to Datsun C3-P3 throttle body
AA3-58	100M to throttle body, offset 11.1mm (0.44")
A3-94	Datsun 4-bolt to 1" SAE flange

LEVERS

PART#	DESCRIPTION
AL1-7-1	Ass'y 44.5mm (1.75") long (std. on AT2-3, AT2-4-1, AT2-4-3, AT2-16-1)
AL1-7-2	Ass'y w/ 6.4mm (0.25") ball stud, 44.5mm (1.75") long
AL1-7-3	Ass'y, 33.3mm (1.31") long (std. on AT2-1, AT-2, AT2-23)
AL1-7-4	Ass'y, w/ swivel, 44.5mm (1.75") long
AL1-7-5	Ass'y, w/ Wisconsin swivel, 6.4mm (0.25") mounting I.D., 20.6mm (0.81") long
AL1-8-2	Stop ass'y, 8.0mm (0.31") mounting I.D., 19.1mm (0.75") long

LEVERS (CONTINUED)

PART#	DESCRIPTION
AL1-25-1	Ass'y, spring loaded, floating, 6.4mm (0.25") mounting I.D., 34.9mm (1.38") long w/ AC2-14-1
AL1-25-2	Ass'y, spring loaded, floating, 6.4mm (0.25") mounting I.D., 34.9mm (1.38") long w/ AC2-14-2
AL1-26-1	Ass'y, floating 6.4mm (0.25") mounting I.D., 54.0mm (2.13") long, w/ AC2-11
AL1-26-2	Ass'y, floating, w/ swivel 6.4mm (0.25") mounting I.D., 54.0mm (2.13") long, w/ AC2-11
AL1-27-1	Ass'y, spring loaded, floating, 8.0mm (0.31") mounting 54.0mm (2.13") long, w/ AC2-12
AL1-27-2	Ass'y, floating w/ swivel, 8.0mm (0.31") mounting I.D., 54.0mm (2.13") long w/AC2-12
AL1-31	Ass'y Shaft clamp, 6.4mm (0.25") mounting I.D., 49.2mm (1.94") long
AL1-33	Ass'y Shaft clamp, 8.0mm (0.31") mounting I.D., 49.2mm (1.94") long
AL1-46	Ass'y Shaft clamp, 8.0mm (0.31") mounting I.D 47.6mm (1.88") long

RETURN SPRINGS

PART#	DESCRIPTION
AS2-50-1	Throttle return, 6.4mm (0.25") Shaft
AS2-50-2	Throttle return, 8.0mm (0.31") Shaft

BRACKET ASSEMBLIES (OPTIONAL)

PART#	DESCRIPTION
AB4-2	Boden Wire
AB4-19	AS2-50-2 Throttle Return Spring

 © IMPCO TECHNOLOGIES, INC.

MODEL CA110 CARBURETOR

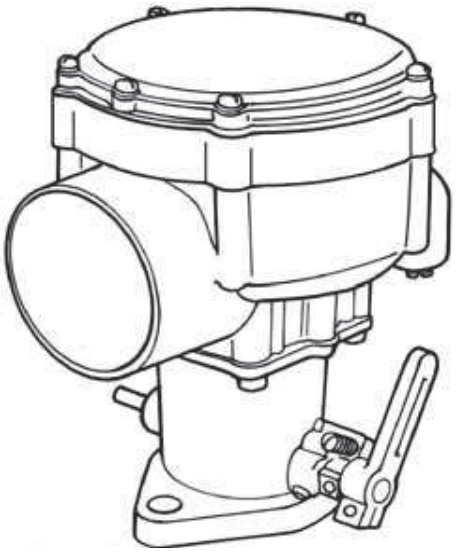

DESCRIPTION

The Model 110 carburetor/mixer is designed primarily for one and two cylinder engines where severe intake manifold pressure pulsations are present. However, its use is not limited to these applications. Improved mixture control and air-gas valve durability can also benefit other applications in intake systems where pressure pulsations could adversely affect a standard 100/125 model assembly.

The Model 110 can be used with LPG Vapor or Natural Gas in applications requiring up to 170 CFM (80.2 L/s). All mixers and complete carburetors use a standard air-gas metering valve that provides adequate fuel mixture range with the appropriate positive (Natural Gas) or negative (LPG Vapor) vaporizer/regulator. It is possible to use other air-gas metering valves and body assemblies from the 100/125 model and may have to be ordered as a separate component part.

SPECIFICATIONS

Fuel Type	LPG Vapor or Natural Gas
Inlet Pressure	-1.5! w.c. (-0.37 kPa)
Operating Temperature Range	-40°F to +250°F (-40°C to +121°C)
Mounting Position	Vertical
Diaphragm Material	Hydrin or Silicone
HP/kW Rating	106 HP (79 kW) @ 170 CFM (80.2 L/s) and 2.0! in Hg manifold depression

DIMENSIONS

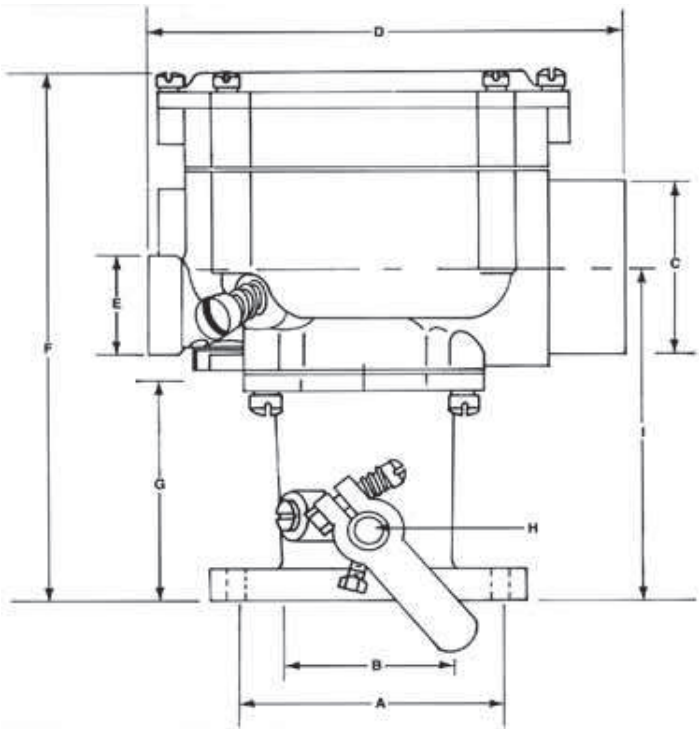

				A	B	C	D	E	F	G	H	I
STD. CARB.	MIXER	THROTTLE BODY	SAE FLANGE	CTR. TO CTR. BOLT SPACING	BORE	MIXER AIR HORN DIA	OVERALL WIDTH	NPT INLET FITTING	OVERALL HEGITH	THROTTLE BODY HEIGHT	THROTTLE SHAFT DIA.	FLANGE TO CTR. OF AIR HORN
110-12	110M-4	AT2-4-1	1-1/2"	74.6mm (2.938")	42.9mm (1.688")	58.7mm (2.313")	131mm (5.156")	1/2"	159mm (6.281")	69.1mm (2.719")	7.9mm (0.313")	99.6mm (3.92")
110-66-2	110M-4	AT2-4-1	1-1/2"	74.6mm (2.938")	42.9mm (1.688")	58.7mm (2.313")	131mm (5.156")	1/2"	159mm (6.281")	69.1mm (2.719")	7.9mm (0.313")	99.6mm (3.92")

 © IMPCO TECHNOLOGIES, INC.

MODEL 110 CARBURETOR

CARBURETORS & MIXERS

COMPONENTS

ITEM#	PART#	DESCRIPTION
1	NSS	Screw, 10-24 x 5/8ฺ SEMS (2)
2	S1-41	Screw, 10-24 x 1-3/8ฺ SEMS (4)
3	NSS	Cover
4	S2-13	Spring, air valvE
5	S1-12	Screw, 8-32 x 5/16ฺ SEMS (4)
6	P2-15	Plate, backup
7	D1-13	Diaphragm
	D1-13-2	Diaphragm, silicone
8	P2-14	Plate, divide
9	G1-13	Gasket, plate to body
10	NSS	Spacer Assy
	NSS	Spacer Only
11	BV1-1	Air gas valve Assy, complete
12	AB1-8	1-8-4 Body Assy
13	G1-11	Gasket, throttle body to mixer
14	NSS	Plug, 1/8 NPT
15	S1-19	Screw, 12-24 x 5/8ฺ SEMS (4)
16	S1-69	Screw, 1/4 -28 x 5/16ฺ (2)
17	S2-88	Spring, idle scre
18	Sl-74	Screw, idle
19	A110-DP	Dashpot Assy
	A110-DP-2	Dashpot Assy, Silicone
20	NSS	Throat, 3/4ฺ SAE flange
21	NSS	Pin, throttle stop (2)
22	S5-1	Throttle shaft, 6.4 mm (0.25ฺ) dia.
	S5-2	Throttle shaft, 8.0 mm (0.31ฺ) dia.
23	NSS	Fly, 19.1 mm (0.75ฺ)
	NSS	Fly, 25.4mm (1.00ฺ)
	NSS	Fly, 38.1 mm (1.50ฺ)
	NSS	Fly, 44.5 mm (1.75ฺ)
24	Sl-22	Screw, 6-32 x 1/4ฺ SEMS (2)
	S1-12	Screw, 8-32 x 5/16ฺ SEMS (2
25	NSS	Bearing Oilite, 6.4 mm (0.25ฺ) ID.
26	NSS	Bearing needle, 6.4 mm (0.25ฺ
27	S3-8	Seal, 6.4 mm (0.25ฺ) shaft (2)
	S3-9	Seal, 8.0 mm (0.31ฺ) shaft (2)
28	S3-25	Seal, internal, 8.0mm (0.31ฺ) ID.,
29	R1-9	Ring, seal retainer (2)
30	NSS	Throttle stop assฺy, 6.4mm (0.25ฺ) ID.
	AL1-8-2	Throttle stop assฺy, 8.0mm (0.31ฺ) ID.
31	NSS	Throttle stop lever
32	S2-15	Spring, idle stop screw
33	S1-21	Stop screw, 6-32 x 1/4"
34	S1-18	Pin, screw, throttle stop
35	NSS	Throttle lever, short w/screw
	AL1-7-l	Throttle lever, long w/screw
36	G1-16	Gasket, 19.1 mm (0.75ฺ) flange
	G1-17	Gasket, 25.4mm (1.00ฺ) flange
	G1-18	Gasket, 31.8mm (1.25ฺ) flange
	G1-19	Gasket, 38.1 mm (1.50ฺ) flange
	G1-23	Gasket, 44.5mm (1.75ฺ) flange
	G1-56	Gasket, 31.8-38.1 mm (l.25-l.50ฺ) flange

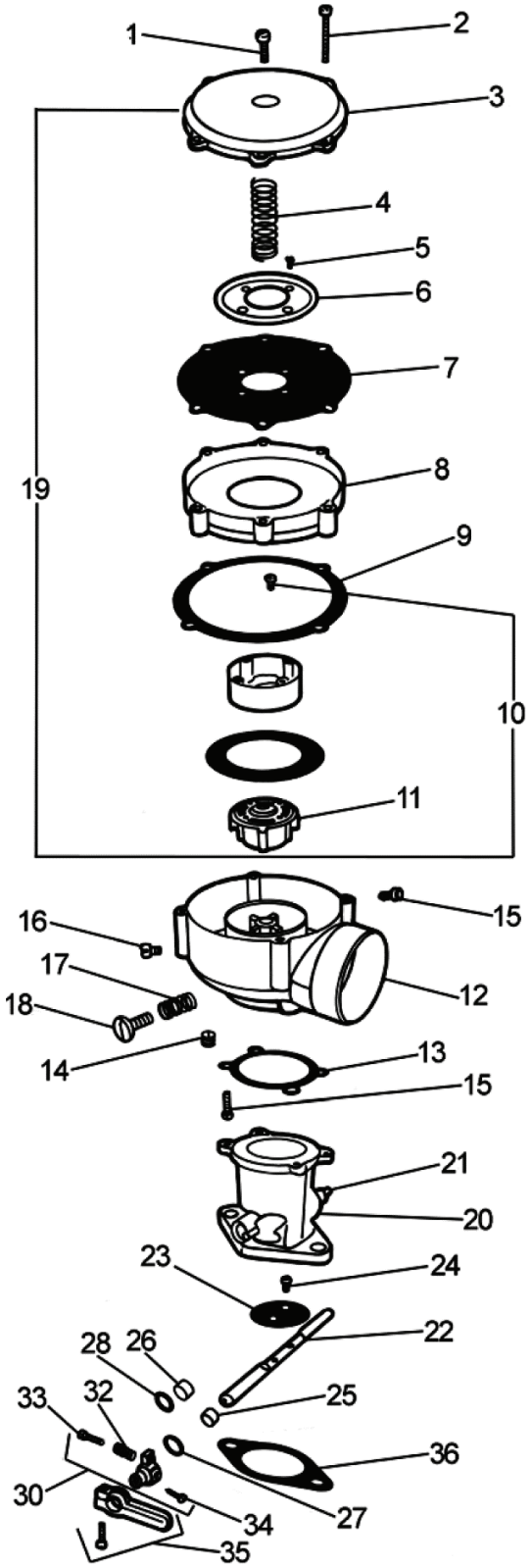

ASSEMBLIES & ACCESSORIES

MIXERS, LP GAS (STANDARD)

PART#	DESCRIPTION
110M-4	58.7 mm (2.31") Air Horn
110M-4-2	58.7 mm (2.31") Air Horn

LEVERS

PART#	DESCRIPTION
AL1-7-1	Ass'y, 44.5 mm (1.75") long
AL1-7-2	Ass'y, w/ 6.4 mm (0.25") ball stud, 44.5 mm (1.75") long
AL1-7-3	Ass'y, 33.3 mm (1.31") long (std. on AT2-1, AT2 2, AT2-23)
AL1-7-4	Ass'y, w/ swivel, 44.5 mm (1.75") long
AL1-7-5	Ass'y, w/ Wisconsin swivel, 6.4 mm (0.25") mounting I.D., 20.6 mm (0.81") long
AL1-8-1	Stop ass'y, 6.4 mm (0.25") mounting I.D., cutdown, 19.1 mm (0.75") long (std. on AT2-1, AT2-2)
AL1-8-2	Stop ass'y, 8.0 mm (0.31") mounting I.D., 19.1 mm (0.75") long
AL1-25-1	Ass'y, spring loaded, floating, 6.4 mm (0.25") mounting I.D.,34.9mm(1.38") long,w/ AC2-14-1
AL1-25-2	Ass'y, spring loaded, floating, 8.0 mm (0.31") mounting I.D.,34.9 mm(1.38") long,w/AC2-14-2
AL1-26-1	Ass'y, floating, 6.4 mm (0.25") mounting I.D.,
AL1-26-2	54.0 mm (2.13") long, w/AC2-11
AL1-27-1	Ass'y, floating, w/ swivel, 6.4 mm (0.25") mounting I.D., 54.0 mm (2.13") long, w/AC2-11
AL1-27-2	Ass'y, floating, 8.0 mm (0.31") mounting I.D.,
AL1-31	54.0 mm (2.13") long, w/AC2-12
AL1-33	Ass'y, floating, w/swivel, 8.0 mm (0.31") mounting I.D., 54.0 mm (2.13") long, w/AC2-12
A1-46	Ass'y, shaft clamp, 6.4 mm (0.25") mounting I.D., 49.2 mm (1.94") long
AL1-27-2	Ass'y, shaft clamp, 8.0 mm (0.31") mounting I.D., 49.2 mm (1.94") long

NOTE: AL1-7-1 through AL1-7-4 levers used w/AL1-8 lever stop.

THROTTLE SHAFTS

PART#	DESCRIPTION
S5-1	6.4 mm (0.25") dia., 114 mm (4.50") long
S5-2	8.0 mm (0.31") dia., 127 mm (5.00") long
S5-6	6.4 mm (0.25") dia., 121 mm (4.75") long
S5-7	8.0 mm (0.31") dia., 133 mm (5.25") long
S5-11	8.0 mm (0.31") dia., 156 mm (6.13") long

THROTTLE BODIES (STANDARD)

PART#	DESCRIPTION
AT2-1	1" SAE flange, 6.4 mm (0.25") shaft dia.
AT2-2	1" SAE flange, 6.4 mm (0.25") shaft dia., w/ vacuum advance
AT2-2-5	1-1/4" SAE flange, 8.0 mm (0.31") dia.
AT2-3	1-1/4" SAE flange, 8.0 mm (0.31") dia., w/ vacuum advance
AT2-3-8	1-1/2" SAE flange, 8.0 mm (0.31") shaft dia.
AT2-4-1	1-3/4" SAE flange, 8.0 mm (0.31") shaft dia.
AT2-4-3	1-3/4" SAE flange, 8.0 mm (0.31") shaft dia., w/ needle bearings
AT2-16-1	1-1/4" to 1-1/2" flange, 8.0 mm (0.31") shaft dia., w/ needle bearings & internal seal
AT2-16-3	1-1/4" to 1-1/2" SAE flange, 8.0 mm (0.31") shaft dia., w/ needle bearings
AT2-16-4	1-1/4" SAE flange, 8.0 mm (0.31") shaft dia.
AT2-23	1-1/4" to 1-1/2" SAE flange, 8.0 mm (0.31") shaft dia., w/ needle bearings & internal seal
AT2-23-4	1-1/4" SAE flange, 8.0 mm (0.31") shaft dia., w/ vacuum advance

RETURN SPRING ASSEMBLIES

PART#	DESCRIPTION
AS2-50-1	Throttle return, 6.4 mm (0.25") shaft AB4-2 Boden wire AS2-50-2 Throttle return, 8.0 mm (0.31") shaft

SPACERS (OPTIONAL)

PART#	DESCRIPTION
AS3-10	Ass'y, 12.7 mm (0.50"), to turn Air Horn 90º A110-DP Model 110 Mixer (also repair kit)
AS3-22	16.7 mm (0.66"), air valve A110-DP-2 Model 110 Mixer, w/ silicone diaphragm (also repair kit)
AS-43	Ass'y, 4.8 mm (0.19"), to turn Air Horn 90º

CARBURETORS/MIXERS

PART#	DESCRIPTION
110-12	Carb, 1-1/2" SAE flange, 2-5/16" Air Horn, Oilite bearings w/ Silicone
110-12-2	Carb, 1-1/4 x 2-5/16 w/ AS2-50-2
110-164	Carb, 1-1/2" SAE flange, 1-1/4X2-5/16 W/As2-50-2
110-66-2	Carb, 2-5/16" Air Horn, silicone diaphragm
110M-4-2	Mixer, with Silicone

BRACKETASSEMBLIES(OPTIONAL)

PART#	DESCRIPTION
AB4-2	Boden Wire

DASHPOT ASSEMBLIES (STANDARD)

PART#	DESCRIPTION
A110-DP	Dashpot Assy 110 Mixer
A110-DP-2	Dashpot Assy 110 Mixer, Silicone

 © IMPCO TECHNOLOGIES, INC.

MODEL CA125 CARBURETOR

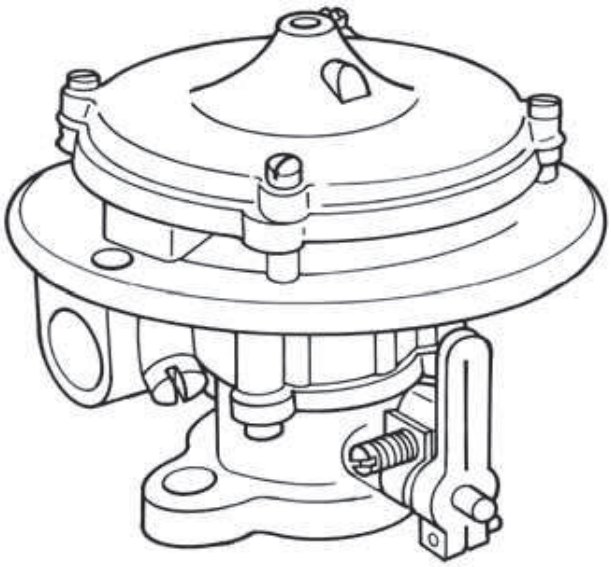

DESCRIPTION

The Model 125 carburetor is a single-diaphragm air valve carburetor/mixer for applications requiring air flow up to 235 CFM (111 L/s). It offers a down draft air inlet that can be used for remote air filtration or open-element type air filters. This unit is available for LPG Vapor and Natural Gas Vapor applications. The Model 125 is also available for feedback applications with the !FB" designation.

Two separate air valve vacuum supplies are available with this mixer. Additional low speed mixture control can be obtained to lean air/fuel mixtures with optional shims.

SPECIFICATIONS

Fuel Type .....LPG Vapor or Natural Gas
Inlet Pressure .....-1.5" w.c. (-0.37 kPa)
Operating Temperature Range .....-40°F to +250°F (-40°C to +121°C)
Mounting Position.....Vertical
Diaphragm.....Hydrin or Silicone
HP/kW .....146 HP (108.8kW) @ 235 CFM (111 L/s) and 2.0" in Hg manifold depression

DIMENSIONS

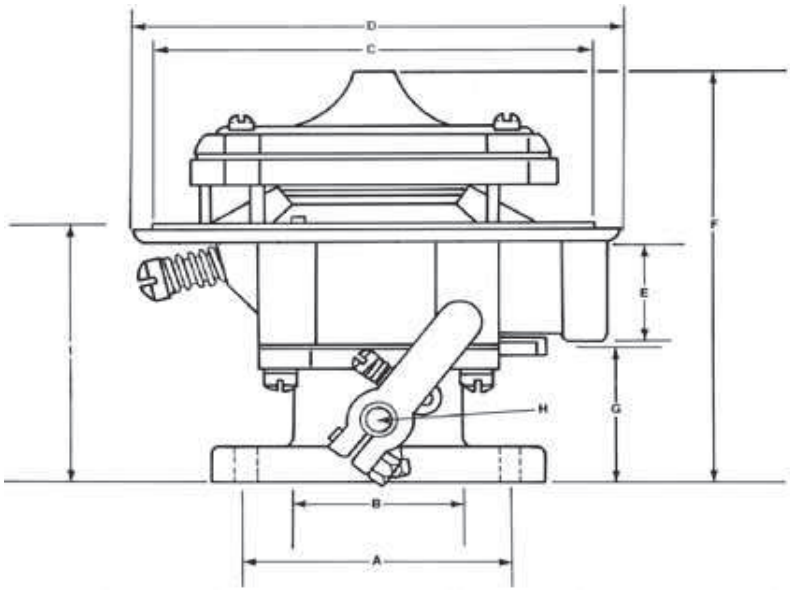

STD. CARB	MIXER	THRTL. BODY	SAE FLANGE	A CTR. TO CTR. BOLT SPACING	B BORE	C MIXER AIR HORN DIA	D OVRAL. WIDTH	E NPT INLET	F OVERALL HEIGHT	G THRTL. BODY HEIGHT
CA125-094	CA125M	AT2-16-1	1.25" X 1.50"	71.4mm (2.813")	42.9mm (1.688")	130mm (5.125")	140mm (5.500")	1/2"	141mm (5.563")	41.3mm (1.625")
CA125-6	CA125M	AT2-16-1	1.25" X 1.50"	71.4mm (2.813")	42.9mm (1.688")	130mm (5.125")	140mm (5.500")	1/2"	141mm (5.563")	41.3mm (1.625")
CA125-8	CA125M	AT2-16-1	1.25" X 1.50"	71.4mm (2.813")	42.9mm (1.688")	130mm (5.125")	140mm (5.500")	1/2"	141mm (5.563")	41.3mm (1.625")
CA125-18	CA125M	AT2-16-1	1.25" X 1.50"	71.4mm (2.813")	42.9mm (1.688")	130mm (5.125")	140mm (5.500")	1/2"	141mm (5.563")	41.3mm (1.625")
CA125-20	CA125M	AT2-16-1	1.25" X 1.50"	71.4mm (2.813")	42.9mm (1.688")	130mm (5.125")	140mm (5.500")	1/2"	141mm (5.563")	41.3mm (1.625")
CA125-26	CA125M	AT2-16-1	1.25" X 1.50"	71.4mm (2.813")	42.9mm (1.688")	130mm (5.125")	140mm (5.500")	1/2"	141mm (5.563")	41.3mm (1.625")
CA125-38	CA125M	AT2-23-5	1.25"	68.3mm (2.688")	36.5mm (1.438")	130mm (5.125")	140mm (5.500")	1/2"	119mm (4.688")	34.9mm (1.375")
CA125-44	CA125M	AT2-3-3	1.25"	68.3mm (2.688")	36.5mm (1.438")	130mm (5.125")	140mm (5.500")	1/2"	154.1mm (4.688")	69.1mm (2.719")
CA125-52	CA125M	AT2-16-1	1.25" X 1.50"	71.4mm (2.813")	42.9mm (1.688")	130mm (5.125")	140mm (5.500")	1/2"	141mm (5.563")	41.3mm (1.625")
CA125-75	CA125M	AT2-23-6	1.25"	68.3mm (2.688")	36.5mm (1.438")	130mm (5.125")	140mm (5.500")	1/2"	119mm (4.688")	34.9mm (1.375")
CA125-76-2	CA125M -2	AT2-23-6	1.25"	68.3mm (2.688")	36.5mm (1.438")	130mm (5.125")	140mm (5.500")	1/2"	119mm (4.688")	34.9mm (1.375")
CA125-100-2	CA125M-2	AT2-16-100	1.25" X 1.50"	71.4mm (2.813")	42.9mm (1.688")	130mm (5.125")	140mm (5.500")	1/2"	141mm (5.563")	41.3mm (1.625")
CA125-108	CA125M	AT2-3-3	1.25"	68.3mm (2.688")	36.5mm (1.438")	130mm (5.125")	140mm (5.500")	1/2"	154.1mm (6.667")	69.1mm (2.719")
CA125-134	NSS	AT2-60G-1	N/A	N/A	N/A	N/A	N/A	1/2"	N/A	N/A

 © IMPCO TECHNOLOGIES, INC.

MODEL 125 CARBURETOR

CARBURETORS & MIXERS

COMPONENTS

ITEM#	PART#	DESCRIPTION
1	G1-66	Gasket, mixer to Air Horn
2	NSS	Screw, 1/4-20 x 1" SEMS
3	S1-3	Screw, 10-24 x 5/8" SEMS (4)
4	C1-26	Cover, air valve
5	S2-85	Spring, air valve
6	S1-22	Screw, 5-32 x 1/4" SEMS (4)
7	P2-22	Plate, backup
8	D1-17	Diaphragm
	D1-17-2	Diaphragm, silicone
9	R1-19	Ring, air valve
10	BV1-14	Air gas valve ass'y, complete
11	AV1-14	Valve & diaphragm Assy
	EV1-14-5	Valve & Diaphragm, Silicone
12	S1-69	Screw, 1/4-28 x 5/16" (3)
13	NSS	Body ass'y
14	NSS	Screw, idle
15	S2-16	Screw, idle screw
16	NSS	Plug, 1/8 NPT
17	NSS	Gasket, throttle body to mixer
18	S1-19	Screw, 12-24 x 5/8" SEMS (4)
19	NSS	(Refer to chart for correct AT2-assembly)
20	NSS	Pin, throttle stop (2)
21	S5-1	Throttle shaft, 6.4 mm (0.25") dia.
	S5-2	Throttle shaft, 8.0 mm (0.31") dia.
22	NSS	Fly, 19.1 mm (0.75")
	NSS	Fly, 25.4 mm (1.00")
	NSS	Fly, 38.1 mm (1.50")
	NSS	Fly, 44.5 mm (1.75")
23	NSS	Screw, 6-32 x 1/4" SEMS (2)
	S1-12	Screw, 8-32 x 5/16" SEMS (2)
24	B2-11	Bearing Oilite, 6.4 mm (0.25") I.D. (2)
25	NSS	Bearing needle, 6.4 mm (0.25") I.D.,
26	S3-8	Seal, 6.4 mm (0.25") shaft (2)
	S3-9	Seal, 8.0 mm (0.31") shaft (2)
	S3-25	Seal, internal, 8.0 mm (0.31") I.D., opt. (2)
27	R1-9	Ring, seal retainer (2)
28	NSS	Throttle stop ass'y 8.0 mm (0.31") I.D.
29	NSS	Throttle stop lever
30	S2-15	Spring, idle stop screw
31	S1-21	Stop screw, 10-32 x 3/4"
32	S1-18	Pin, screw, throttle stop
33	AL1-7-3	Throttle lever, short, w/screw
	AL1-7-1	Throttle lever, long, w/screw
34	G1-16	Gasket, 19.1 mm (0.75") flange
	G1-17	Gasket, 1" flange
	NSS	Gasket, 25.4 mm (1.00") flange
	NSS	Gasket, 31.8 mm (1.25") flange
	NSS	Gasket, 38.1 mm (1.50") flange
	G1-23	G1-23 Gasket, 44.5 mm (1.75") flange
	G1-56	G1-56 Gasket, 31.8 - 38.1 mm (1.25 -1.50") flange

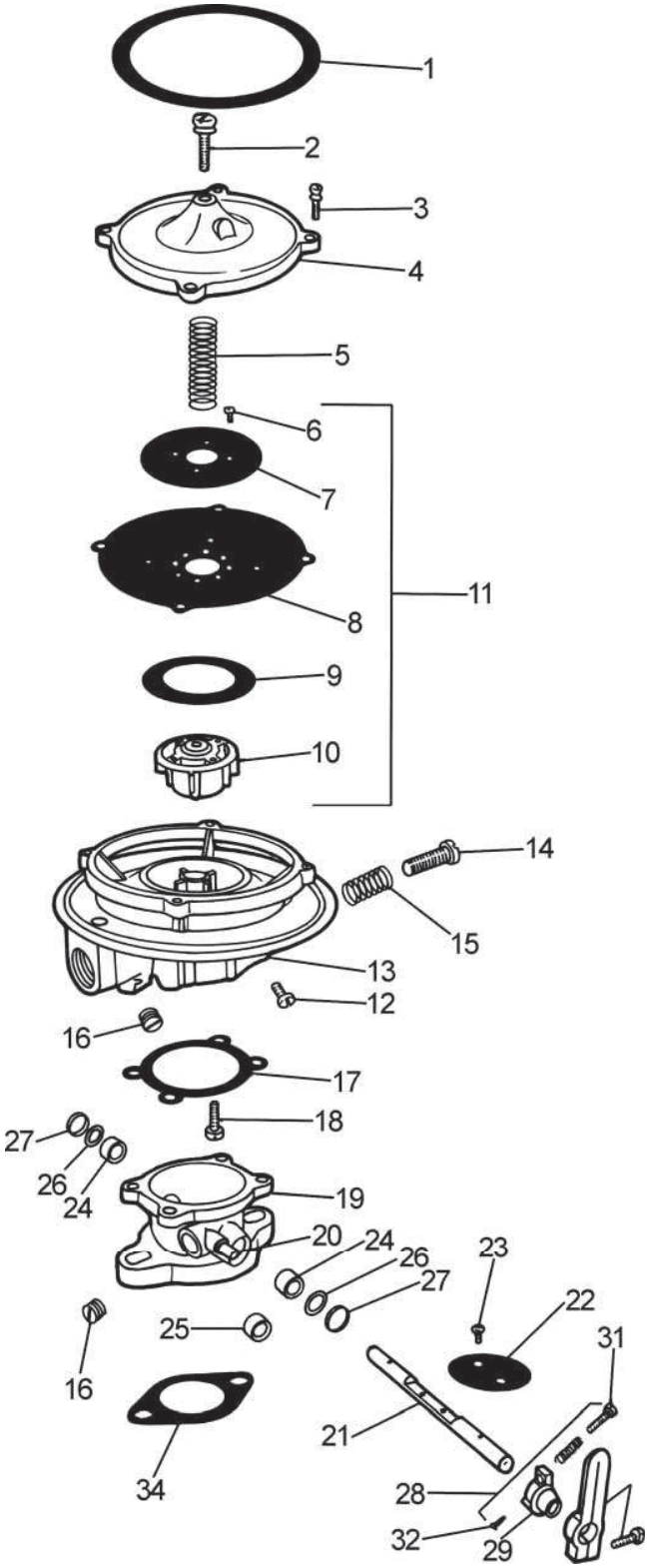

ASSEMBLIES & ACCESSORIES

MIXERS, LP GAS (STANDARD)

PART#	DESCRIPTION
CA125M	Mixer
CA125M-10	Mixer, complete vac. Lifter 100% Flow
CA125M-10-2	Mixer, complete vac. Lifter 100% Flow, Silicone
CA125M-2	ASM Mixer w/ silicone diaphragm dia.
CA125M-292	Mixer, Ass'y for CA125-134
CA125M-3	Mixer, Lean
FB125-30672-001	Feedback Mixer Ass'y, 4.3L SCAQMD
FB125M	Mixer Ass'y, Feedback

THROTTLE SHAFTS

PART#	DESCRIPTION
S5-1	6.4mm (0.25") dia., 114mm (4.50") long
S5-2	8.0 mm (0.31") dia., 127 mm (5.00)" long
S5-6	6.4 mm (0.25") dia., 121 mm (4.75") long
S5-7	8.0 mm (0.31") dia., 133 mm (5.25)" long
S5-11	8.0 mm (0.31") dia., 156 mm (6.13") long

RING SPACERS

PART#	DESCRIPTION
R1-20	Donaldson, V, 58.7 mm (2.31") dia
R1-29	Air valve spacer, AV1-14 (to lean idle mixtures)

AIR CLEANER ASSEMBLIES

PART#	DESCRIPTION
AF1-5	71 L/s (150 cfm), 172 mm (6.75") O.D., 60.3 mm (2.38") high
F1-5	Filter, elem Air CA125 150cfm
AF1-8	118 L/s (2.50 cfm), 234 mm (9.25") O.D., 76.2 mm (3.00")
AL1-8-2	118 L/s (2.50 cfm), 234 mm (9.25") O.D., 76.2 mm (3.00") high
AF1-14	236 L/s (500 cfm), 228 mm (9.00") O.D., 191 mm (7.50")
C1-28	Cover, F1-5

THROTTLE BODIES (STANDARD)

PART#	DESCRIPTION
AT2-1	3/4" SAE flange, 6.4mm (0.25") Shaft dia.
AT2-2	1" SAE flange, 6.4 mm (0.25") shaft dia.
AT2-2-5	1" SAE flange, 6.4 mm (0.25") shaft dia., w/vacuum advance
AT2-3	1-1/4" SAE flange, 8.0 mm (0.31") shaft dia.
AT2-3-8	1-1/4" SAE flange, 8.0 mm (0.31") shaft dia., w/ vacuum
AT2-4-1	1-1/2" SAE flange, 8.0 mm (0.31") shaft dia.
AT2-4-3	1-3/4" SAE flange, 8.0 mm (0.31") shaft dia.
AT2-16-1	1-1/4" to 1/2" SAE flange, 8.0 mm (0.31") shaft dia., no
AT2-16-4	1-1/4" to 1/2" SAE flange, 8.0 mm (0.31") shaft w/needle
AT2-23	1-1/4" SAE flange, 8.0 mm (0.31") shaft dia.
AT2-23-4	1-1/4" to 1/2" SAE flange, 8.0 mm (0.31") shaft dia., w/
AT2-2-6	Throttle Ass'y, 1" Long Shaft

NOTES: * AT2-16's have vacuum port.
* The above throttle bodies are offset.

SPACERS (OPTIONAL)

PART#	DESCRIPTION
AS3-10	Ass'y, 12.7 mm (0.50"), to turn Air horn 90º
AS3-43	Ass'y, 4.8 mm (0.19"), to turn Air horn 90º

BRACKET ASSEMBLIES (OPTIONAL)

PART#	DESCRIPTION
AB4-2	Throttle Cable/Boden Wire Bracket
AB4-19	AS2-50-2 Throttle Return Springs

RETURN SPRING ASSEMBLIES

PART#	DESCRIPTION
AS2-50-1	Throttle return, 6.4 mm (0.25") shaft
AS2-50-2	Throttle return, 8.0 mm (0.31") shaft

LEVERS

PART#	DESCRIPTION
AL1-7-1	Ass'y, 44.5 mm (1.75") long
AL1-7-2	Ass'y, w/ 6.4 mm (0.25") ball stud, 44.5 mm, long
AL1-7-3	Ass'y, 33.3 mm (1.31") long
AL1-7-4	Ass'y, w/ swivel, 44.5 mm (1.75") long
AL1-7-5	Ass'y, w/ Wisconsin swivel, 6.4 mm (0.25")
A1-8-1	Stop ass'y, 6.4 mm (0.25") mounting I.D., 19.1
AL1-8-2	Stop ass'y, 8.0 mm (0.31") mounting I.D., 19.1
AL1-25-1	Ass'y, spring loaded, floating, 6.4 mm (0.25")
AL1-25-2	Ass'y spring loaded, floating, 8.0 mm (0.31")
AL1-26-1	Ass'y, floating, 6.4 mm (0.25") mounting I.D., 54.0
AL1-26-2	Ass'y, floating, w/ swivel, 6.4 mm (0.25")
AL1-27-1	Ass'y, floating, 8.0 mm (0.31") mounting I.D., 54.0
AL1-27-2	Ass'y, floating, w/ swivel, 8.0 mm (0.31")
AL1-31	Ass'y, shaft clamp, 6.4 mm (0.25") mounting I.D.,
AL1-33	Ass'y, shaft clamp, 8.0 mm (0.31") mounting I.D.,
AL1-46	Ass'y, steel shaft clamp, 8.0 mm (0.31") mounting

CLAMP

PART#	DESCRIPTION
AC2-29	Clamp Assy, CA125-76

GOVERNOR

PART#	DESCRIPTION
AD1-85	Diaphragm, Asst. Throttle, governor
AT2-60G-1	Governor, Hyster 2V
AT2-77G	Governor, Assy
AT2-200	Governor, Assy LPG

ADAPTERS

PART#	DESCRIPTION
A1-53	Adapter, 125 Series Carb
A2-7	Air Horn, 66.7 mm (2.63") dia.
A2-8	Air Horn, 58.7 mm (2.31") dia.
A2-9	Air Horn, 56.4 mm (2.22") dia.
A2-33	Air Horn, 80 mm (3.16") dia.
A2-34	Air Horn, 54 mm (2.13") dia.
A3-28	200M, CA22M to 77.8 mm (3.06") hose (use w/
A3-29-1	Adapt. CA100M to CA125M to 2-1/16"

 © IMPCO TECHNOLOGIES, INC.

ASSEMBLIES & ACCESSORIES

ADAPTERS (CONTINUED)

PART#	DESCRIPTION
AA3-29-1	CA125M to 52.4 mm (2.06") hose
AA3-29-2	CA125M to 52.4 mm (2.06") hose, tapped 12-24
A3-31	CA125M to 57.2 mm (2.25") hose
AA3-32-1	CA125M to IMPCO 2B throttle body
AA3-43	CA125M to Toyota lift truck throttle body
AA3-49	CA125M to Datsun C5-P5 Nikki throttle body
AA3-50	CA125M to Datsun C3-P3 throttle body
AA3-58	CA125M to throttle body, 11.1 mm (0.44") offset
A3-94	Datsun 4 bolt to 1" SAE Flange

AIR-GAS VALVE ASSEMBLIES

PART#	DESCRIPTION
AV1-14	Std, w/hydrin, diaphragm, LPG
AV1-14-2	Lean, w/hydrin, diaphragm, LPG
AV1-14-3	Std, w/silicone, diaphragm, LPG
AV1-14-4	Lean, w/silicone, diaphragm, LPG
AV1-14-220-2	W/silicone, diaphragm, for non-feedback
AV1-1447-2	For std. feedback, w/silicone, diaphragm
CV1-14	Special lean, w/hydrin, diaphragm
CV1-14-2	Special lean, w/silicone, diaphragm
EV1-14	W/42 valve
EV1-14-2	W/42 valve & silicone diaphragm
EV1-14-4	Air Gas Valve Assembly
AV1-30692-001	Air Gas Valve Assembly

ACCESSORIES

PART#	DESCRIPTION
VCS	Valve, Solenoid Vacuum Lift

 © IMPCO TECHNOLOGIES, INC.

MODEL CA125M-10 MIXER

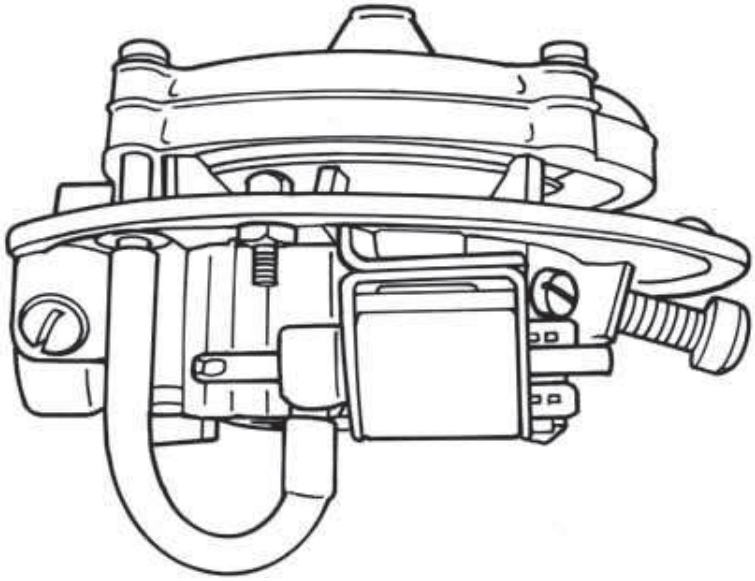

DESCRIPTION

The Model 125M-10 is a vacuum lift mixer designed to reduce inlet restrictions in dual fuel installations with air flow requirements up to 235 CFM (111 L/s). In some applications, inlet restrictions cannot be tolerated with a conventional gasoline carburetor as they will cause it to run rich.

The 125M-10 provides an electrically-operated solenoid that directs manifold vacuum to the top diaphragm chamber when gasoline operation is desired. This provides full air valve lift, reducing air inlet restriction to a minimum. The 125M-10 is available with standard type air-gas metering valves and feedback control systems.

SPECIFICATIONS

Fuel Type	LPG Vapor, Natural Gas
Inlet Pressure	-1.5! w.c. (-0.37 kPa)
Operating Temperature Range	-40°F to +250°F (-40°C to +121°C)
Mounting Position	Vertical
Diaphragm Material	Hydrin or Silicone
HP/kW	146 hp (175.2kW) @ 235 CFM (111 L/s) and 2.0! in Hg manifold depression

DIMENSIONS

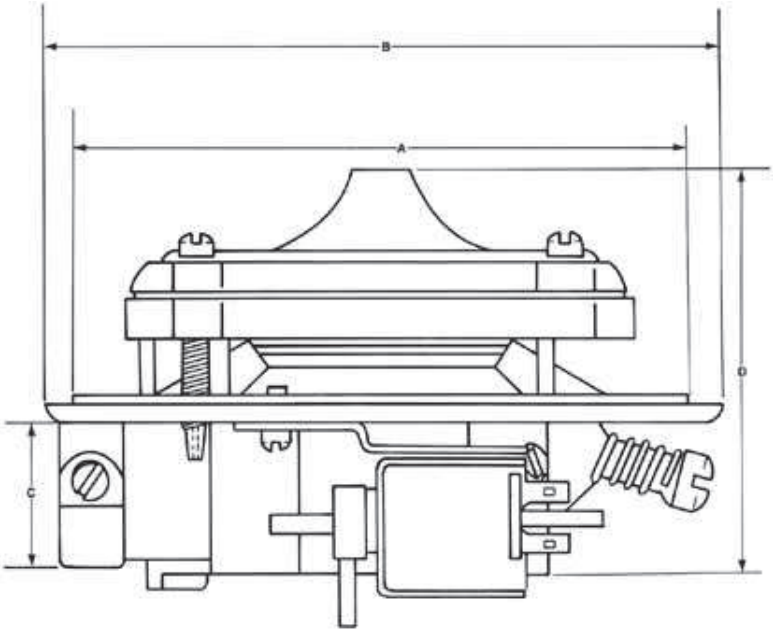

	A	B	C	D
MIXER	MIXER AIR HORN DIA.	OVERALL WIDTH	NPT INLET FITTING	OVERALL HEIGHT
CA125M-10	130MM (5.13")	140MM (5.50")	1/2"	100MM (3.94")
CA125M-10-2	130MM (5.13")	140MM (5.50")	1/2"	100MM (3.94")

 © IMPCO TECHNOLOGIES, INC.

MODEL 125M-10 CARBURETOR

CARBURETORS & MIXERS

COMPONENTS

ITEM#	PART#	DESCRIPTION
1	G1-66	Gasket, Mixer to Air Horn
2	NSS	Screw, 1/4-20 x 1" SEMS
3	S1-3	Screw, 10-24 x 5/8" SEMS (4)
4	NSS	Screw, 1/4 x 1-3/4" fillister head,
5	NSS	Cover, Air Valve
6	S2-85	Spring, air valve
7	S1-22	Screw, 5-32 x 1/4" SEMS (4)
8	P2-22	Plate, backup
9	D1-17	Diaphragm
	D1-17-2	Diaphragm, Silicone
10	R1-19	Ring, air valve
11	BV1-14	Air Gas Valve Assy, Complete
12	AV1-14-12	Valve & diaphragm Assy, Complete
	EV1-14-5	Valve & diaphragm Assy, Silicone, Complete
13	S1-69	Screw, 1/4-28 x 5/16" (3)
14	NSS	Body ass'y
15	NSS	Screw, Idle
16	S2-16	Spring, idle screw
17	NSS	Plug, 1/8 NPT
18	G1-11	Gasket, throttle body to mixer
19	S1-19	Scrw, 12-24 x 5/8" SEMS (4)
20	NSS	Wire, terminal
21	F4-2	Fitting, 1/4-28 to 1/4" hose
22	NSS	Hose
23	NSS	Fitting, 1/4-28 to 3/16" hose

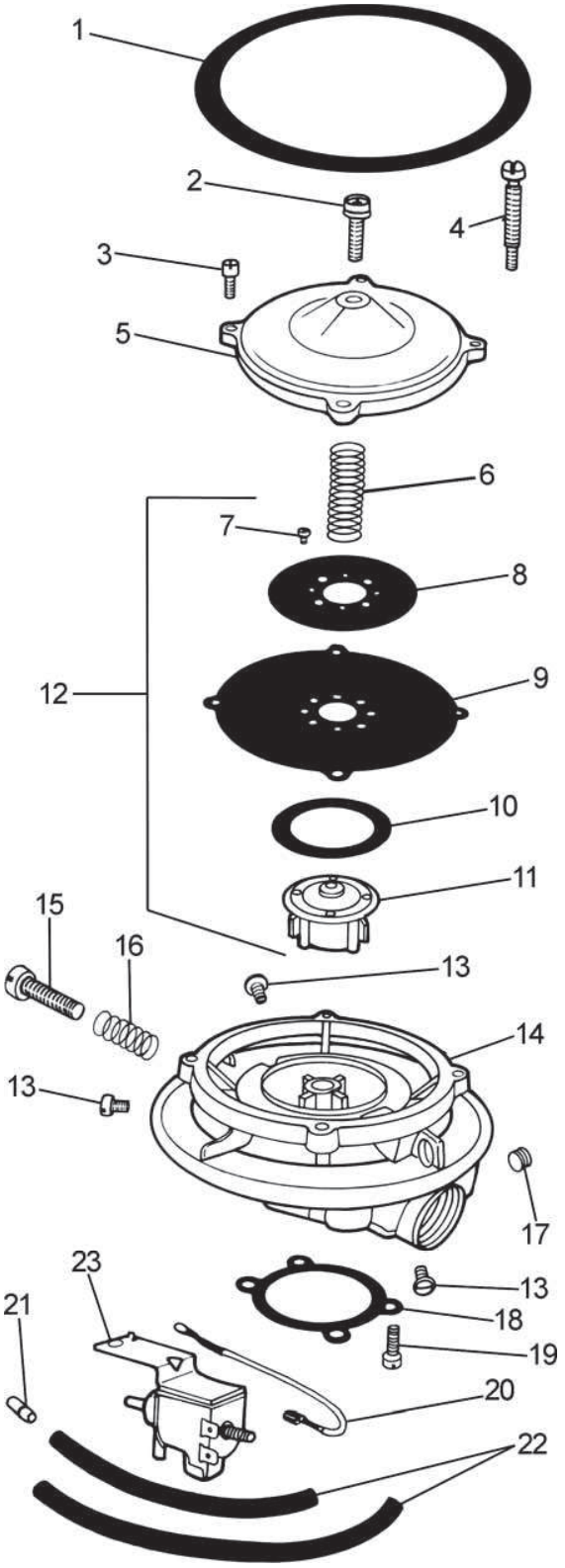

ASSEMBLIES & ACCESSORIES

AIR GAS VALVE ASSEMBLIES

PART#	DESCRIPTION
AV1-14-12	Dual fuel for vacuum lift CA125M-10, w/ Hydrin diaphragm
AV1-14-12-2	Dual fuel for vacuum lift CA125M-10, w/ silicone diaphragm
AV1-1447-2*	For std. feedback, w/silicone diaphragm

*Modification required for vacuum lift operation.

AIR CLEANER ASSEMBLIES

PART#	DESCRIPTION
AF1-5	71L/s (150 cfm), 172 mm (6.75") O.D., 60.3 mm (2.38") high
AF1-8	118L/s (250 cfm), 234 mm (9.25") O.D., 76.2 mm (3.00") high
AF1-14	236L/s (500 cfm), 228 mm (9.00") O.D., 191 mm (7.50") high

ADAPTERS

PART#	DESCRIPTION
A2-7	Air Horn 66.7 mm (2.63") dia.
A2-8	Air Horn 58.7 mm (2.31") dia.
A2-9	Air Horn 56.4 mm (2.22") dia.
A2-33	Air Horn 80 mm (3.16") dia.
A2-34	Air Horn 54 mm (2.13") dia.
A2-47	Adapter, Air Cleaner Base
AA3-29-1	CA125M to 2-1/16" hose
AA3-29-2	CA125M to 2-1/16" hose, tapped 12-24
A3-29-3	CA125M to 2-1/16" hose, w/ mounting base
A3-30	200M, CA225M to 2-5/8" hose (use w/ A3-32-1)
A3-31	CA125M to 2-1/4" hose
AA3-32-1	CA125 to IMPCO 2B throttle body

CA125 SERIES CARBURETORS

PART#	DESCRIPTION
CA125-094	Carburetor Ass'y, 1.25 x 1.50 SAE
CA125-100-2	Carburetor, 1-1/2" SAE flange w/ Silicone
CA125-108	Carburetor, 1-1/4" high profile SAE flange, 2-5/16" Air Horn, Oilite bearings, lean flow
CA125-134	Carburetor, governor ass'y, Hyster forklift
CA125-20	Carburetor, 1-1/4" & 1-1/2" SAE flange, to fit 5" Air Horn
CA125-26	Carburetor, 1-1/2" SAE flange, 2-5/8" Air Horn
CA125-38	Carb, 1-1/4" SAE flange, 2-5/16" Air Horn, EV1-14 72/80 flow
CA125-44	Carburetor, 1-1/4" SAE flange, 2-5/16" Air Horn
CA125-52	Carb, 1-1/4" & 1-1/2" SAE flange, no Air Horn, w/ bracket & swivel
CA125-6	Carb 1-1/4" & 1-1/2" SAE flange, 2-5/16" Air Horn
CA125-75	Carb, 1-1/4" SAE flange (short), 80 mm Air Horn, lever w/clamp on
CA125-76-2	Carb, 1-1/4" SAE flange (short), 80 mm Air Horn, spring hole R, w/ AV1-14-76-2
CA125-8	Carb, 1-1/4" & 1-1/2" SAE flange, 2-5/16" center stud Air Horn

CA125 SERIES MIXERS

PART#	DESCRIPTION
CA125M	Mixer with Hydrin Diaphragm
CA125M-10	Mixer, dual fuel, vacuum lift mixer with Hydrin diaphragm
CA125M-10-2	Mixer, dual fuel, vacuum lift mixer with Silicone diaphragm
CA125M-2	Mixer with Silicone diaphragm
CA125M-292	Mixer Assembly for CA125-134
CA125M-3	Lean flow mixer with Silicone diaphragm
FB125-30672-001	Mixer Assembly Feedback 4.3 L SCAQMD

 © IMPCO TECHNOLOGIES, INC.

MODEL 200 CARBURETOR

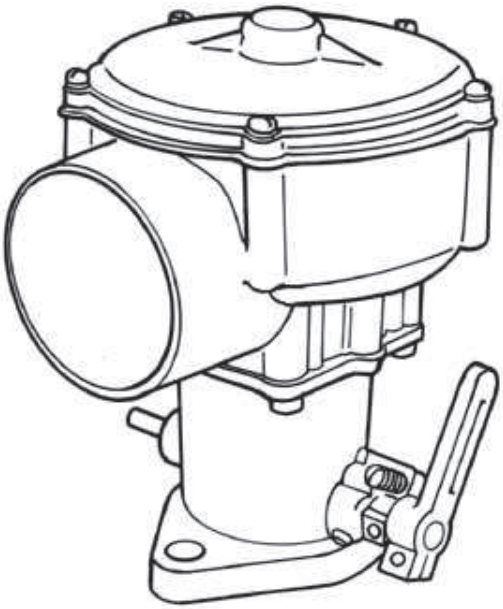

DESCRIPTION

The Model 200 is a single diaphragm air-valve carburetor/mixer. It offers a 90° air inlet to provide low overhead clearance, and is available with several air horn and throttle valve options. This unit is available for LPG Vapor or Natural Gas for applications with air flow requirements up to 345 CFM (162.8 L/s).

The Model 200 is also available for feedback applications with the !FB! designation.

The 200 mixer provides a convenient 1/8" balance port at the air inlet. Additional low speed idle mixture control can be obtained to lean air/fuel mixtures through the use of optional shims.

SPECIFICATIONS

Fuel Type	LPG Vapor or Natural Gas
Inlet Pressure	-1.5" w.c. (-0.37 kPa)
Operating Temperature Range	-40°F to +250°F (-40°C to +121°C)
Mounting Position	Vertical
Diaphragm Material	Hydrin (Standard), Silicone (Optional)
HP/kW	215 hp (160.3 kW) @ 345 CFM (162.8 L/s) and 2.0" in Hg manifold depression

DIMENSIONS

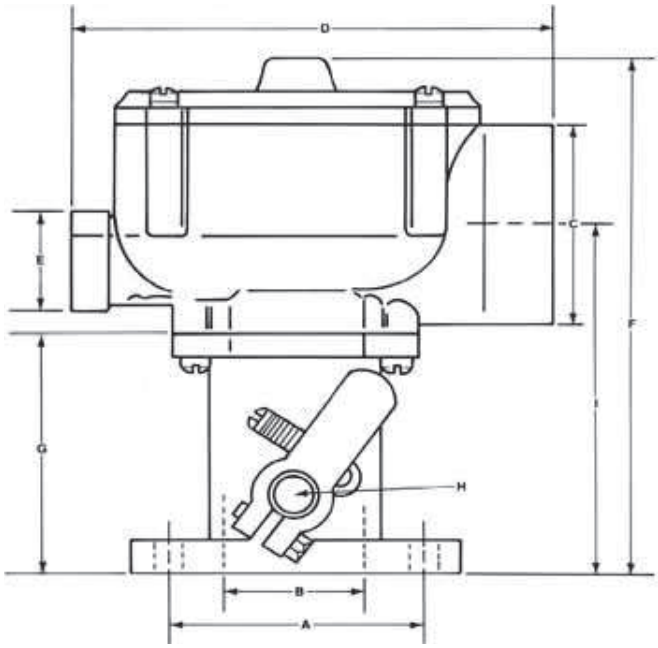

				A	B	C	D	E	F	G	H	I
STD. CARB.	MIXER	THRTL. BODY	SAE FLANGE	CTR. TO CTR. BOLT SPACING	BORE	MIXER AIR HORN DIA.	OVERALL WIDTH	NPT INLET FITTING	OVERALL HEIGHT	THROTTLE BODY HEIGHT	THROTTLE SHAFT DIA.	FLANGE TO CTR. OF AIR HORN
200-2	200M-1	AT2-4-2	1-1/2"	74.6 mm (2.938")	42.9 mm (1.688")	66.7 mm (2.625")	165 mm (6.500")	3/4"	175 mm (6.875")	69.9 mm (2.750")	7.9 mm (0.313")	110 mm (4.334")
200-2-2	200M-1-2	AT2-4-2	1-1/2"	74.6 mm (2.938")	42.9 mm (1.688")	66.7 mm (2.625")	165 mm (6.500")	3/4"	175 mm (6.875")	69.9 mm (2.750")	7.9 mm (0.313")	110 mm (4.334")
200-4	200M-1	AT2-5	1-3/4"	84.1 mm (3.313")	49.2 mm (1.938")	66.7 mm (2.625")	165 mm (6.500")	3/4"	187 mm (7.375")	82.6 mm (3.250")	9.5 mm (0.375")	123 mm (4.844")
200-6	200M-2	AT2-6	2"	90.5 mm (3.563")	55.6 mm (2.188")	77.8 mm (3.063")	165 mm (6.500")	3/4"	187 mm (7.375")	82.6 mm (3.250")	9.5 mm (0.375")	123 mm (4.844")
200-6-2	200M-2-2	AT2-6	2"	90.5 mm (3.563")	55.6 mm (2.188")	77.8 mm (3.063")	165 mm (6.500")	3/4"	187 mm (7.375")	82.6 mm (3.250")	9.5 mm (0.375")	123 mm (4.844")
200-8	200M-2	AT2-5	1-3/4"	84.1 mm (3.313")	49.2 mm (1.938")	77.8 mm (3.063")	165 mm (6.500")	3/4"	187 mm (7.375")	82.6 mm (3.250")	9.5 mm (0.375")	123 mm (4.844")
200-8-2	200M-2-2	AT2-5	1-3/4"	84.1 mm (3.313")	49.2 mm (1.938")	77.8 mm (3.063")	165 mm (6.500")	3/4"	187 mm (7.375")	82.6 mm (3.250")	9.5 mm (0.375")	123 mm (4.844")
DG200-29	NSS	NSS		90.5 mm (3.563")	55.6 mm (2.188")	77.8 mm (3.063")	165 mm (6.500")	3/4"	187 mm (7.375")	82.6 mm (3.250")	9.5 mm (0.375")	123 mm (4.844")

 © IMPCO TECHNOLOGIES, INC.

MODEL 200 CARBURETOR

CARBURETORS & MIXERS

COMPONENTS

ITEM#	PART#	DESCRIPTION
1	S1-3	Screw, 10-24 x 5/8" SEMS (4)
2	C1-18	Cover
3	S2-17	Spring, Air Valve
4	S1-12	Screw, 8-32 x 5/16" SEMS (4)
5	P2-21	Plate, backup
6	D1-16-1	Diaphragm
	D1-16-2	Diaphragm, Slicone
7	R1-17	Ring, air valve
8	NSS	Air-gas Valve Assy
9	AV1-12-6	Air-gas Valve Assy w/diaphragm
	DG-AV1-12-2	Digester Gas Valve Assy w/Silicon diaphragm
10	NSS	Body Assy, 66.7mm (2.625") Air Horn
	AB1-11-2	Body ass'y, 77.8 mm (3.063") Air Horn
11	S2-16	Spring, Idle Screw
12	NSS	Screw, Idle
13	G1-21	Gasket, throttle body to mixer
14	S1-19	Screw, 12-24 x 5/8 SEMS (4)
15	NSS	Plug, 1/8 NPT
16	NSS	(Refer to Throttle Body Chart)
17	NSS	Pin, throttle stop (2)
18	S5-2	Throttle Shaft, 7.9mm (0.313") dia.
	S5-3	Throttle Shaft, 9.5mm (0.375") dia.
19	NSS	Butterfly, 38.1 mm (1.500")
	NSS	Butterfly, 44.5 mm (1.750")
	NSS	Butterfly, 50.8 mm (2.000")
20	S1-12	Screw, 8-32 x 5/16" SEMS (2)
21	B2-13	Bearing, Oilite, 7.9 mm (0.313") I.D. (2)
22	B2-7	Bearing, needle, 7.9 mm (0.313") I.D.
23	NSS	Bearing, needle, 9.5 mm (0.375") I.D.
	S3-9	Seal, 7.9 mm (0.313") shaft (2)
	S3-11	Seal, 9.5 mm (0.375") shaft (2)
24	S3-20	Seal, Internal 9.5mm (0.375") ID Optional
25	R1-9	Ring, seal retainer, 7.9 mm (0.313") shaft (2)
	R1-8	Ring, seal retainer, 9.5 mm (0.375") shaft (2)
26	AL1-8-2	Throttle Stop Assy 7.9mm (0.313") ID
	AL1-10	Throttle Stop Assy 9.5 mm (0.375") ID
27	NSS	Throttle stop lever, 7.9 mm (0.313") I.D
	NSS	Throttle stop lever, 9.5 mm (0.375") I.D
28	S2-15	Spring, Stop Screw
29	S1-21	Stop screw, 10-32 x 3/4"
30	S1-18	Pin Screw, Throttle Stop
31	AL1-7-1	Throttle Lever, w/S1-17, L1-7
	AL1-9-1	Throttle Lever, w/S1-26, L1-9
	AL1-9-1A	Throttle Lever 58.7 mm (2.31") long, 0.562"mounting ID
32	NSS	Throttle Lever
33	NSS	Screw, 10-24 x 5/8"
	NSS	Screw, 12-24 x 5/8"
34	G1-19	Gasket, 38.1 mm (1.500") flange
	G1-23	Gasket, 44.5 mm (1.750") flange
	G1-24	Gasket, 50.8 mm (2.000") flange

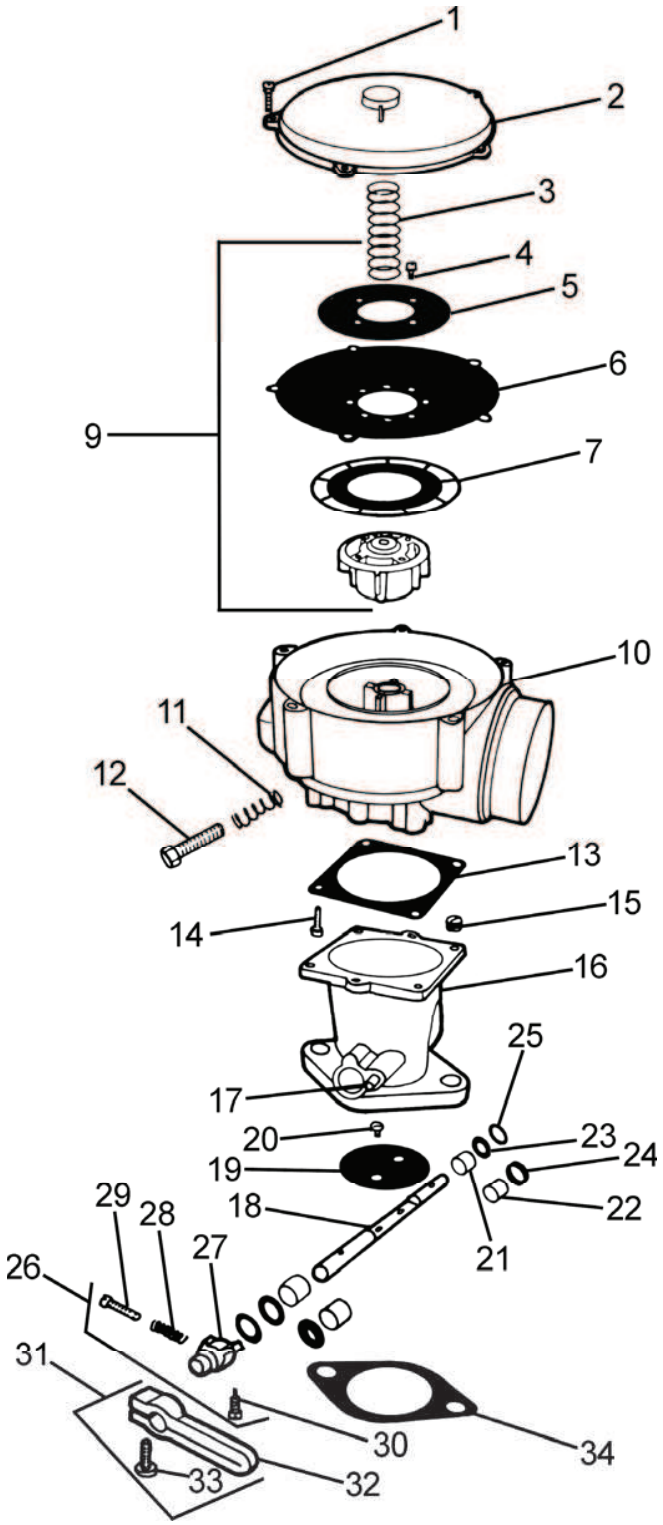

ASSEMBLIES & ACCESSORIES

MIXERS, LP GAS (STANDARD)

PART#	DESCRIPTION
200M-1	For 66.7 mm (2.63") Air Horn
200M-1-2	For 66.7 mm (2.63") Air Horn, w/ silicone diaphragm
200M-2	For 77.8mm (3.06") Air Horn
200M-2-2	For 77.8mm (3.06") Air Horn, w/ silicone diaphragm
200M-2-3	For 77.8mm (3.06") A.H., w/4 Air Valve Vac Ports
FB200M-1-2	For ATECO, feedback, 66.7 mm (2.63") Air Horn
FB200M-2-2	For feedback, 77.8 mm (3.06") Air Horn, w/silicone diaphragm

ADAPTERS

PART#	DESCRIPTION
AA3-19	Adapt. 200M to Holley 2B throttle body
A3-28	Adapt. 200M to 3-1/16" hose
A3-30	Adapt. 200M to 2-5/8" hose
AA3-32-2	Adapt. 200M to CA100 throttle body
AA3-47-2	Adapt. 200M to CA425 throttle body
AA3-48-2	Adapt. 200M to CA425 hose elbow

RING SPACER

PART#	DESCRIPTION
R1-30	Ring, air valve spacer, for AV1-12 (to leanmixture)

RETURN SPRINGS

PART#	DESCRIPTION
AS2-50-2	7.9 mm (0.31") throttle return
AS2-50-3	9.5 mm (0.38") throttle return
AS2-50-4	11.1 mm (0.44") throttle return

THROTTLE BODIES (ONE BARREL)

PART#	DESCRIPTION
AT2-4-2	Standard, 38.1 mm (1.50") flange, 7.9 mm (0.31") shaft dia.
AT2-5	Standard, 44.5 mm (1.75") flange, 9.5 mm (0.38") shaft dia.
AT2-6	Standard, 50.8 mm (2.00") flange, 9.5 mm (0.38") shaft dia., center bore
AT2-6-3	50.8 mm (2.00") flange, 9.5 mm (0.38") shaft dia., center bore, w/ needle bearings & internal seal

THROTTLE BODIES (TWO BARREL)

PART#	DESCRIPTION
AT2-11-1	Standard, 31.8 mm (1.25") flange, 11.1 mm (0.44")shaft dia.
AT2-12	Standard, 38.1 mm (1.50") flange, 11.1 mm (0.44") shaft dia.
AT2-13-1	Standard, Holley, 11.1 mm (0.44") shaft dia.

THROTTLE SHAFTS

PART#	DESCRIPTION
S5-2	7.9 mm (0.31") dia., 127 mm (5.00") long, standard AT2-4-2
S5-3	9.5 mm (0.38") dia., 138 mm (5.44") long, standard onAT2-5, AT2-6
S5-4	11.1 mm (0.44") dia., 179 mm (7.06") long, standard on 2B throttle bodies
S5-7	7.9 mm (0.31") dia., 133 mm (5.25") long (5.00")
S5-11	7.9 mm (0.31") dia., 156 mm (6.13") long

SPACERS

PART#	DESCRIPTION
AS3-45	Spacer ass'y, 20.6 mm (0.81") high
AS3-10	12.7 mm (0.500") tall, used to rotate mixer Air Horn 90º
AS3-43	4.8 MM (0.188") tall, used to rotate mixer Air Horn 90º

 © IMPCO TECHNOLOGIES, INC.

ASSEMBLIES & ACCESSORIES (CONTINUED)

LEVERS

PART#	DESCRIPTION
AL1-7-1	Ass'y, 44.5 mm (1.75") long (std. on AT2-3, AT2-4-1, AT2-4-3, AT2-16-1)
AL1-7-2	Ass'y, w / 64 mm (0.25") ball stud, 44.5 mm (1.75")
AL1-7-3	Ass'y, 33.3 mm (1.31") long (std. on AT2-1, AT2-2, AT2-23)
AL1-7-4	Ass'y, w/ swivel, 44.5 mm (1.75") long
AL1-8-2	Stop ass'y, 7.9 mm (0.31") mounting I.D., 19.1 mm (0.75") long (std. on AT2-3, AT2-4-1, AT2-4-3, AT2-16-1, AT2-23)
AL1-8-4	Stop ass'y, 7.9 mm (0.31") mounting I.D., 19.1 mm (0.75") long
AL1-9-1	58.7 mm (2.31") long, standard on AT2-11-1, AT2-6)
AL1-9-1A	58.7 mm (2.31") long, 0.562"mounting ID
AL1-10	Lever stop ass'y, 9.5 mm (0.38") mounting ID 22.2mm (0.88") long, standard on AT2-5, AT2-6
AL1-11-1	Lever stop ass'y, 11.1 mm (0.44") mounting ID 25.4mm (1.00") long, standard on AT2-11-1, AT2-12, AT2-13-1, AT2-15
AL1-12-1	77.8mm (3.06") long
AL1-12-3	58.7mm (2.31") long, standard on AT2-11-1, AT2-13-1, AT2-12-1-, AT2-15
AL1-25-2	Ass'y, spring loaded, floating 7.9 mm (0.31") mounting I.D., 34.9 mm (1.38") long, w/ AC2-14-2
AL1-27-1	Ass'y, floating 7.9 mm (0.31") mounting I.D., 54.0 mm (2.13") long, w/AC2-12
AL-27-2	Ass'y, floating 7.9 mm (0.31") mounting I.D., 54.0 mm (2.13") long, w/ AC2-12, w/swivel
AL1-33	Ass'y, shaft clamp, 7.9 mm (0.31") mounting I.D., 49.2 mm (1.94") long
AL1-46	Ass'y, steel shaft clamp, 7.9 mm (0.31") mounting I.D., 47.6 mm (1.88") long

NOTE:
AL1-7-1 through AL-17-4 levers used w/ AL1-8 lever stop
AL1-9 levers used a/AL1-10 lever stop
AL1-12 lever used w/AL1-11 lever stop
See Accessories section of catalog for other optional levers.

AIR GAS VALVES

PART#	DESCRIPTION
AV1-12	Standard, w/Hydrin diaphragm
AV1-12-2	Standard, w/Silicone diaphragm
AV1-12-3	For 1 & 2 cylinder engines, w/Hydrin diaphragm & ball check ass'y
AV1-12-3-2	For 1 & 2 cylinder engines, w/Silicone diaphragm & ball check ass'y
AV1-12-6	Rich, w/ Hydrin diaphragm
AV1-1245	Standard feedback, w/Hydrin diaphragm
AV1-1245-2	Standard feedback, w/Silicone diaphragm
AV1-1245-4	Feedback, richer idle
DG-AV1-12	For digester gas (550-750 BTU), w/Hydrin diaphragm
DG-AV1-12-2	For digester gas (550-750 BTU), w/Silicone diaphragm
LH-AV1-12-2	Valve Ass'y, Low Heat, Silicone
CV1-12	Valve Ass'y, Natural Gas
CV1-12-2	For Natural Gas, w/Silicone diaphragm

SLEEVE DIGESTER MIXER

PART#	DESCRIPTION
S6-1	Sleeve DG200
S6-2	Sleeve DG200T

 © IMPCO TECHNOLOGIES, INC.

MODEL 200D CARBURETOR

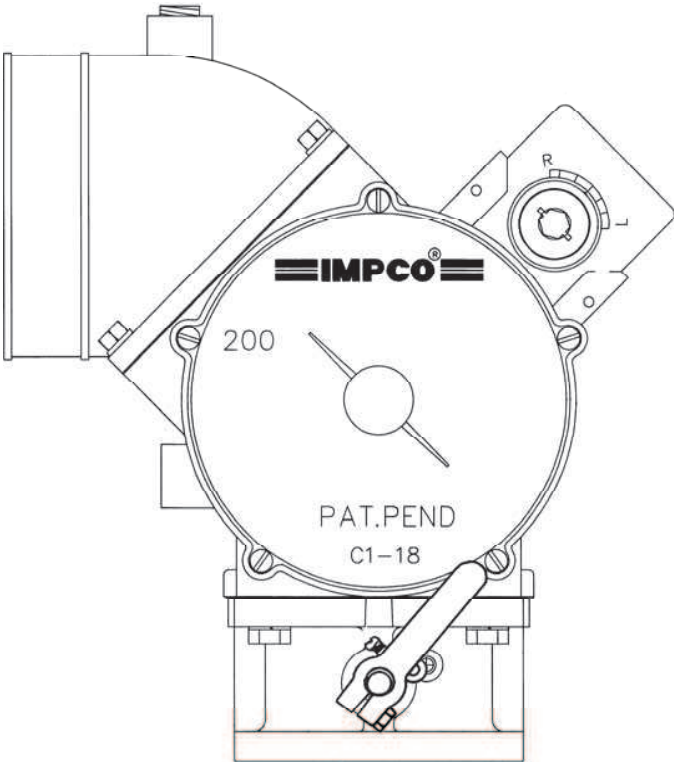

DESCRIPTION

The Model 200D is a dual diaphragm air-valve carburetor/ fuel mixer. It offers a 90° air inlet to provide low overhead clearance, and is available with several Air Horn and throttle valve options. This unit is available for LPG Vapor, Natural Gas, Digester/Landfill Gas applications as low as 500 BTU for with air flow requirements up to 468 CFM (221 L/s). The Model 200D is also available for feedback applications with the 'FB' designation, and offers tamper resistant compliance using the optional tamper resistant mixture adjustment caps. The 200D mixer provides a convenient 1/4!"balance port at the air inlet, and a slow speed #dle! adjustment. Additional low speed idle mixture control can be obtained to lean air/fuel mixtures through the use of optional shims. All DG model mixers reduce air flow by 30%. The valve can be turned with an imperial 5/16! or metric 8mm hex key from both sides and can be made tamper resistant cap to comply with tamper resistant emission regulations by using Tamper Resistant Plug, part number P3-17956-20, purchased separately.

SPECIFICATIONS

Fuel Type	LPG Vapor, Natural Gas and Digester/Landfill Gas (550-2,500 BTU)
Inlet Pressure	-1.5! w.c. (-0.37 kPa)
Operating Temperature	-40°F to +250°F (-40°C to +121°C)
Mounting Position	Vertical
Diaphragm Material	Hydrin (Standard), Silicone (Optional)
HP/kW	292 hp (217.7kW) @ 468 CFM (221 L/s) and 2,500 BTU per cubic foot with 2.0! in Hg manifold depression

DIMENSIONS

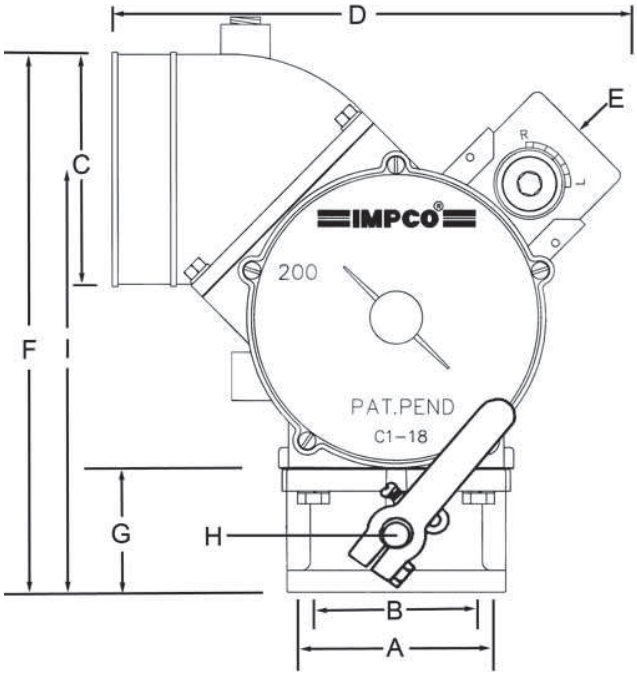

STD CARD	MIXER	THRTL BODY	SAE FLANGE	A CTR. TO CTR. BOLT SPACING	B BORE	C MIXER AIR HORN DIA.	D OVERALL WIDTH	E NTP INLET	F OVERALL HEIGHT	G THRTLE BODY HEIGHT	H THRTLE SHAFT DIA.	I FLANGE TO CTR OF AIR HORN
200D-1	200DM	AT2-7	2.5"	73.0mm (2.875")	68.2mm (2.69")	88.9mm (3.50")	224.6mm (8.84")	1-1/4"	227.3mm (8.95")	53.9mm (2.13")	11.1mm (.44")	183.0mm (7.2")
200D-3	200DM	AT2-7	2.5"	73.0mm (2.875")	68.2mm (2.69")	101.6mm (4.00")	224.6mm (8.84")	1-1/4"	233.7mm (9.20")	53.9mm (2.13")	11.1mm (.44")	183.0mm (7.2")
200D-3L	200DM	AT2-7	2.5"	73.0mm (2.875")	68.2mm (2.69")	101.6mm (4.00")	224.6mm (8.84")	1-1/4"	233.7mm (9.20")	53.9mm (2.13")	11.1mm (.44")	183.0mm (7.2")
200D-3-2	200DM-2	AT2-7	2.5"	73.0mm (2.875")	68.2mm (2.69")	101.6mm (4.00")	224.6mm (8.84")	1-1/4"	233.7mm (9.20")	53.9mm (2.13")	11.1mm (.44")	183.0mm (7.2")
200D-5	200DM	AT2-8	3"	82.6mm (3.25")	82.6mm (3.25")	101.6mm (4.00")	224.6mm (8.84")	1-1/4"	235.0mm (9.27")	56.0mm (2.19")	11.1mm (.44")	184.7mm (7.27")
200D-7	200DM	AT2-7	2.5"	73.0mm (2.875")	68.2mm (2.69")	101.6mm (4.00")	224.6mm (8.84")	1-1/4"	233.7mm (9.20")	53.9mm (2.13")	11.1mm (.44")	183.0mm (7.2")
DG200D-3	N/A	AT2-7	2.5"	73.0mm (2.875")	68.2mm (2.69")	101.6mm (4.00")	224.6mm (8.84")	1-1/4"	233.7mm (9.20")	53.9mm (2.13")	11.1mm (.44")	183.0mm (7.2")

TAMPER RESISTANT PLUG

PART #	DESCRIPTION
P3-17956-20	Plug, Expansion

 © IMPCO TECHNOLOGIES, INC.

MODEL 200D CARBURETOR

CARBURETORS & MIXERS

COMPONENTS

ITEM #	PART #	DESCRIPTION
1	NSS	Plug, 1/4" NPT
2	E1-7 / E1-8	Air Horn
3	NSS	Screw, 1/4-20 x 3/4" SEMS
4	G1-26*	Gasket, Air Horn
5	AB1-12L	Body Assy, Left Hand 200 DM
	AB1-12R	Body Assy, Right Hand 200 D
6	AS1-33	Screw, Idle (Early Models Only)
7	S2-18	Spring, Idle (Early Models Only)
8	S1-3	Screw, 10-24 x 5/8" SEMS
9	C1-18	Cover
10	S2-17	Spring, air valve
11	S1-12	Screw, 8-32 x 5/16" SEMS
12	NSS	Plate, Back up
13	D1-16-1	Diaphragm
	D1-16-2*	Diaphragm, Silicone
14	R1-17	Ring, Air Valve
15	BV1-12	Air Gas Valve Ass'y
16	AV1-12*	Valve and Diaphragm Ass'y
	AV1-12-2*	Air Valve Assy w/Silicone Diagm.
17	G1-25*	Gasket, Throttle Body to Mixer
18	S1-30	Screw, 5/16 - 18 x 7/8" Hex
19	NSS	Throat Assy
20	P1-6	Pin, throttle Stop
21	S5-4	Throat Shaft, 7/16" Dia
22	F2-7	Fly, 2 - 1/2"
	F2-8	Fly, 3"
23	NSS	Screw, 12-24 x 5/8" SEMS
24	B3-44	Permaglide Bearing, 7/16" ID
	B2-9*	Needle Bearing, 7/16" ID
25	S3-96	Seal, Internal 7/16" Shaft
	S3-19*	Seal, 7/16" Shaft
26	R1-52	Ring, Seal Retainer
	R1-11*	Ring, Seal Retainer
27	AL1-11-1	Throttle Stop Ass'y
28	NSS	Throttle Stop Lever
29	S2-15	Spring, Idle Stop
30	S1-12	Screw, Idle Stop 10-32 x 3/4"
31	S1-18	Pin, Screw Throttle Stop
32	AL1-12-3	Throttle Lever Ass'y, Long
33	NSS	Throttle Lever
34	S1-32	Screw, 1/4 - 20 x 7/8" Hex
35	G1-27*	Gasket, 2-1/2" Flange
	G1-28*	Gasket, 3" Flange

*Included in Repair Kit RK-200D-1

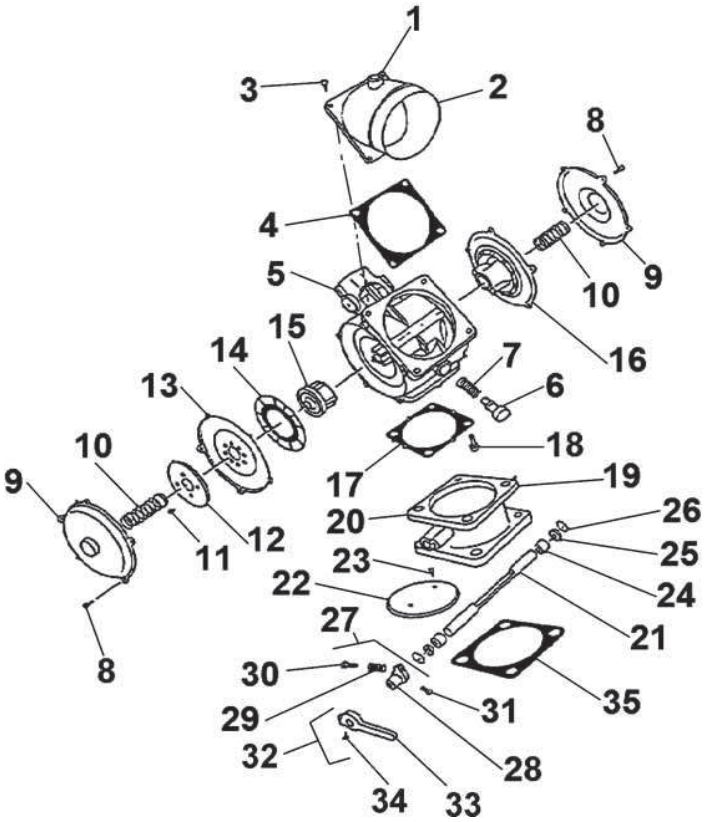

*Note that during reassembly, the Diaphragm, Air Valve and Assembly must be installed with the Paper Gasket facing downward and the two slots in the center of the Air Valve installed at a 90 degree angle to the square boss. It is recommended that prior to disassembly of Air Valve & Diaphragm Assembly, the individual parts be marked noting placement and orientation to ensure proper reassembly. Refer to IMPCO TSB-132 for additional information

ASSEMBLIES & ACCESSORIES

MIXERS

PART #	DESCRIPTION
200DM-2L	Mixer, Left Hand w/Silicone
200DM-901	Mixer, Ass'y Turbo Cummins L10

THROTTLE BODIES

PART #	DESCRIPTION
AT2-7	Throat Assy, 2.5" SAE
AT2-8	Throat Assy, 3.0" SAE

THROTTLE SHAFT

PART #	DESCRIPTION
S5-4	Shaft 7/16" X 7.06

AIR-GAS VALVE ASSEMBLIES

PART #	DESCRIPTION
AV1-12	Air Gas Valve Ass'y, STD. Hydrin
AV1-12-3	Air Gas Valve Ass'y, STD. w/ Silicone
AV1-1245	Air Gas Valve Ass'y, STD. w/ Ball Check
AV1-1245-2	Air Gas Valve Ass'y, Feedback Silicone
CV1-12	Air Gas Valve Ass'y, Natural Gas Hydrin
CV1-12-2	Air Gas Valve Ass'y, Natural Gas Silicone
DG-AV1-12	Air Gas Valve Ass'y, Digester Gas Hydrin
DG-AV1-12-2	Air Gas Valve Ass'y, Digester Gas Silicone
LH-AV1-12-2	Air Gas Valve Ass'y, Low heat Gas Silicone

ADAPTERS

PART #	DESCRIPTION
E1-7	Air Horn, 45º elbow 4" Dia.
E1-8	Air Horn, 45º elbow 3.5" Dia.
E1-7-2	Air Horn, 45º elbow 4" Dia. (3) Balance Ports

LEVERS

PART #	DESCRIPTION
AL1-11-1	Stop Assembly, 7/16" mounting ID
AL1-12-1	Assembly, 3-1/16" long
AL1-12-3	Assembly, 2-5/16" long Std.

RETURN SPRINGS

PART #	DESCRIPTION
AS2-50-4	7/16" Throttle Return

RING SPACER

PART #	DESCRIPTION
R1-30	Ring, Air Valve Spacer

BRACKET ASSEMBLY

PART #	DESCRIPTION
AB4-4	Bracket, Throttle Cable/Boden (Used on 200D-7)

GASKETS

PART #	DESCRIPTION
G1-26	Air Horn to Mixer Body
G1-27	2.5" SAE Flange to Mixer
G1-28	3.0" SAE Flange to Mixer

REPAIR KIT

PART #	DESCRIPTION
RK-200DM-887	Repair Kit, 200D
RK-200D-1	Repair Kit, 200D

TAMPER RESISTANT CAPS

PART #	DESCRIPTION
!"#$%&'"()	**********+,-. /01

 © IMPCO TECHNOLOGIES, INC.

MODEL 200T CARBURETOR

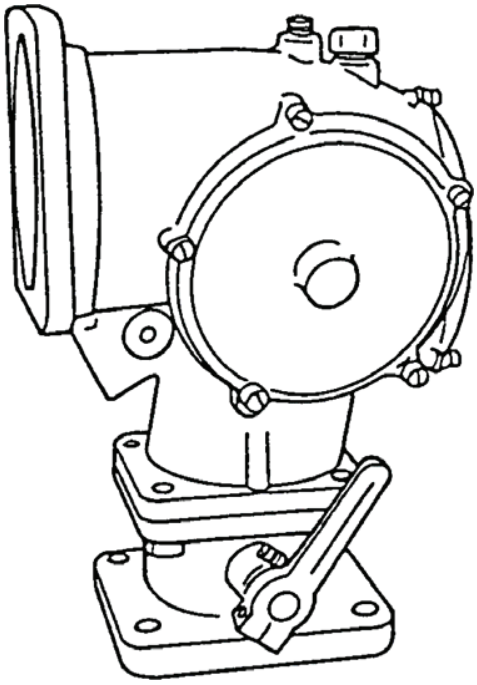

DESCRIPTION

The Model 200T is a triple diaphragm air-valve carburetor/mixer that offers a 90° air inlet to provide low overhead clearance, and is available with several air horn and throttle valve options. This unit is available for LPG Vapor, Natural Gas, and Digester Gas applications as low as 500 BTU with air flow requirements up to 680 CFM (320.9 L/s). The Model 200T is also available for feedback applications with the 'FB' designation.

The 200T mixer provides a convenient 1/4! balance port at the air inlet. Additional low speed idle mixture control can be obtained to lean air/fuel mixtures through the use of optional shims. All Digester Gas model mixers reduce air flow by 30%.

SPECIFICATIONS

Fuel Type	LPG Vapor, Natural Gas and Digester/Landfill Gas (550-2,500 BTU)
Inlet Pressure	-1.5! w.c. (-0.37 kPa)
Operating Temperature	-40°C to 120°C (-40°F to 250°F)
Mounting Position	Vertical
Diaphragm	Hydrin or Silicone
HP(kW)	425 hp (316.9kW) @ 680 CFM (320.9 L/s) and 2.0!" #n Hg manifold depression

DIMENSIONS

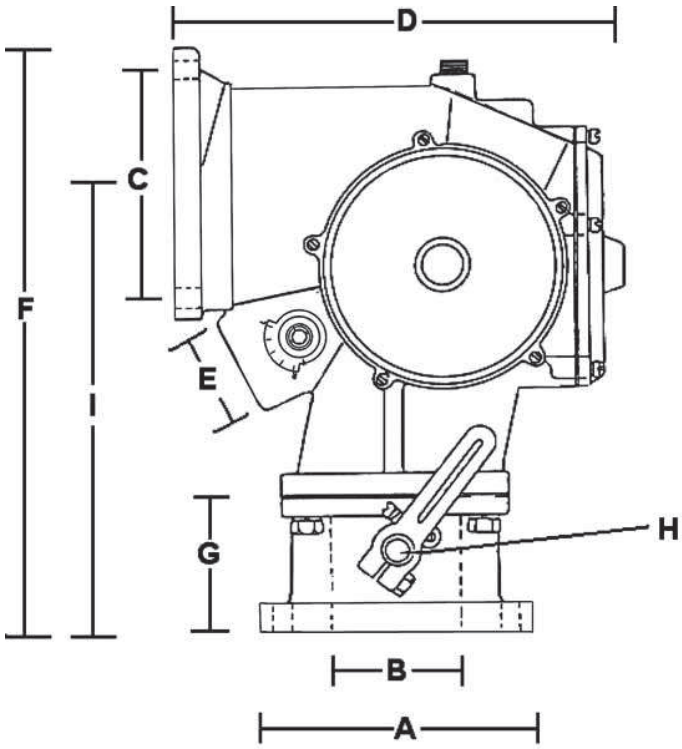

				A	B	C	D	E	F	G	H	I
STD. CARB.	MIXER	THRTL. BODY	SAE FLANGE	CTR. TO CTR. BOLT SPACING	BORE	MIXER AIR HORN DIA.	OVRAL. WIDTH	NPT INLET	OVRAL. HEIGHT	THRTL. BODY HEIGHT	THRTL. SHAFT DIA.	FLANG. TO CTR. OF AIR HORN
200T-1	200TM-1	AT2-9	3-1/2"	94.4 mm (3.72")	93.6 mm (3.69")	98.4 mm (3.88")	226.6 mm (9.0")	1-1/4"	279.4 mm (11.0")	66.6 mm (2.63")	12.7 mm (.50")	222.2 mm (8.75")
200T-1L	200TM-1L	AT2-9	3-1/2"	94.4 mm (3.72")	93.6 mm (3.69")	98.4 mm (3.88")	226.6 mm (9.0")	1-1/4"	279.4 mm (11.0")	66.6 mm (2.63")	12.7 mm (.50")	222.2 mm (8.75")
200T-1-2	200TM-1-2	AT2-9	3-1/2"	94.4 mm (3.72")	93.6 mm (3.69")	98.4 mm (3.88")	226.6 mm (9.0")	1-1/4"	279.4 mm (11.0")	66.6 mm (2.63")	12.7 mm (.50")	222.2 mm (8.75")
200T-3	200TM-1	AT2-10	4"	104.7 mm (4.13")	93.6 mm (3.69")	114.3 mm (4.50")	226.6 mm (9.0")	1-1/4"	304.8 mm (12.0")	69.8 mm (2.75")	12.7 mm (.50")	234.9mm (9.25")
200T-3-2	200TM-1	AT2-10	4"	104.7 mm (4.13")	93.6 mm (3.69")	114.3 mm (4.50")	226.6 mm (9.0")	1-1/4"	304.8 mm (12.0")	69.8 mm (2.75")	12.7 mm (.50")	234.9mm (9.25")
200T-602	200TM-1	!"#$#%&'	3-1/2"	94.4 mm (3.72")	93.6 mm (3.69")	98.4 mm (3.88")	226.6 mm (9.0")	1-1/4"	279.4 mm (11.0")	66.6 mm (2.63")	12.7 mm (.50")	222.2 mm (8.75")

 © IMPCO TECHNOLOGIES, INC.

MODEL 200T CARBURETOR

CARBURETORS & MIXERS

COMPONENTS

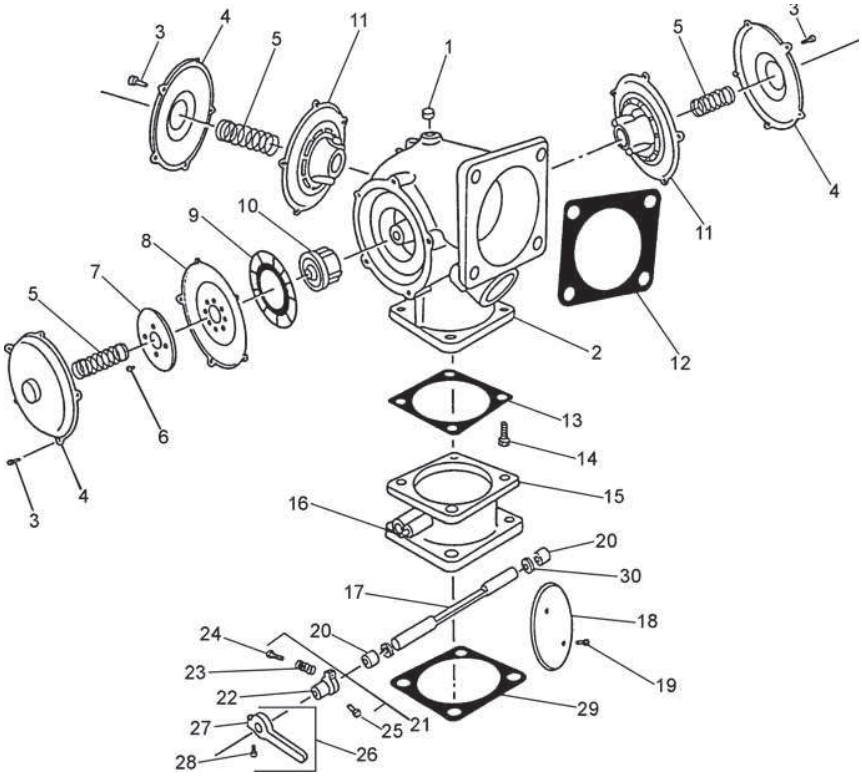

*Note that during reassembly, the Diaphragm, Air Valve and Assembly must be installed with the PaperGasket facing downward and the two slots in the center of the Air Valve installed at a 90 degree angle to the square boss. It is recommended that prior to disassembly of Air Valve & Diaphragm Assembly, the individual parts be marked noting placement and orientation to ensure proper reassembly. Refer to IMPCO TSB-132 for additional information.

ITEM #	PART #	DESCRIPTION
1	NSS	Plug, 1/4" NPT
2	AB1-14	Body Assy, 3 1/2"
	AB1-14L	Body Assy, 3 1/2", Left Hand
	AB1-18	Body Assy 200T 4"
3	S1-3	Screw, 10-24 x 5/8" SEMS
4	C1-18	Cover
5	S2-17	Spring, Air Valve
6	S1-12	Screw, 8-32 x 5/16" SEMS
7	P2-21	Plate, Back up
8	D1-16-1	Diaphragm
	D1-16-2	Diaphragm, Silicone
9	R1-17	Ring, Air Valve
10	BV1-12	Air Gas Valve Ass'y
11	AV1-12*	Valve and Diaphragm Ass'y
12	G1-31	Gasket, 3-1/2" Air Horn
13	G1-30	Gasket, Throttle Body to Mixer
14	S1-34	Screw, 3/8 - 16 x 1" SEMS

ITEM #	PART #	DESCRIPTION
15	NSS	Throat
16	AV1-12	Pin, Throttle Stop
17	S5-5	Shaft, Throttle 1/2" (AT2-9)
	S5-4	Shaft, Throttle 7/16" (AT2-8)
18	F2-9	Fly, 3-11/16" Dia.
19	S1-35	Screw, 10-32 x 3/8" SEMS
20	B3-43	Permaglide Bearing, 1/2" ID
	B3-44	Permaglide Bearing, 7/16" ID
21	AL1-11-2	Throttle Stop Ass'y, 1/2" ID
22	NSS	Throttle Stop Lever, 1/2" ID
23	S2-15	Spring, Idle Stop Screw
24	S1-21	Stop, Screw 10-32 x 3/4"
25	S1-18	Pin, Screw Throttle Stop
26	AL1-12-1	Throttle Lever s/screw
27	NSS	Throttle Lever
28	S1-32	Screw, 1/4" -20 x 7/8" Hex
29	G1-29	Gasket, 3-1/2" Flange
	G1-38	Gasket, Flange SAE AT2-10
	G1-39	Gasket, Flange 4" Air Horn
30	S3-93	Seal, Internal 7/16" Shaft

ASSEMBLIES & ACCESSORIES

MIXERS

PART #	DESCRIPTION
200T-1	Carb.3-1/2" SAE Flange R.H.
200T-1-2	Carb.3-1/2"SAE, W/Sil
200T-1L	Carb 3 1/2"SAE Left Hand
200T-3	Carb 4"SAE Flg Rh Or Lh
200T-3-2	Carb 4" SAE W/Sil Diaphram
200T-602	Carb Assy W/B3 & S3-93
200TM-1-2	Mixer,3-1/2" W/Silicone

THROTTLE BODIES

PART #	DESCRIPTION
AT2-9	3-1/2" SAE Flange, 7/16" Shaft w/ permgld.

AIR-GAS VALVE ASSEMBLIES

PART #	DESCRIPTION
AV1-12	Air Gas Valve Ass'y, STD. Hydrin
AV1-12-2	Air Gas Valve Ass'y, STD. w/ Silicone
AV1-12-3	Air Gas Valve Ass'y, STD. w/ Ball Check
AV1-1245	Air Gas Valve Ass'y, Feedback Hydrin
AV1-1245-2	Air Gas Valve Ass'y, Feedback Silicone
CV1-12	Air Gas Valve Ass'y, Natural Gas Hydrin
CV1-12-2	Air Gas Valve Ass'y, Natural Gas Silicone
LH-AV1-12-2	Air Gas Valve Ass'y, Low heat Gas Silicone

LEVERS

PART #	DESCRIPTION
AL1-11-1	Stop Assembly 7/16" mounting ID

RETURN SPRINGS

PART #	DESCRIPTION
AS2-50-4	7/16" Throttle Return

ADAPTERS

PART #	DESCRIPTION
E1-7	Air Horn, 45º elbow 4" Dia.
E1-8	Air Horn, 45º elbow 3-1/2" Dia.

RING SPACER

PART #	THROTTLE BODIES
R1-30	Ring, Air Valve Spacer

TAMPER RESISTANT CAPS

PART #	DESCRIPTION
!"#$%&'"()	**********+,-. /01

 © IMPCO TECHNOLOGIES, INC.

MODEL 210 CARBURETOR

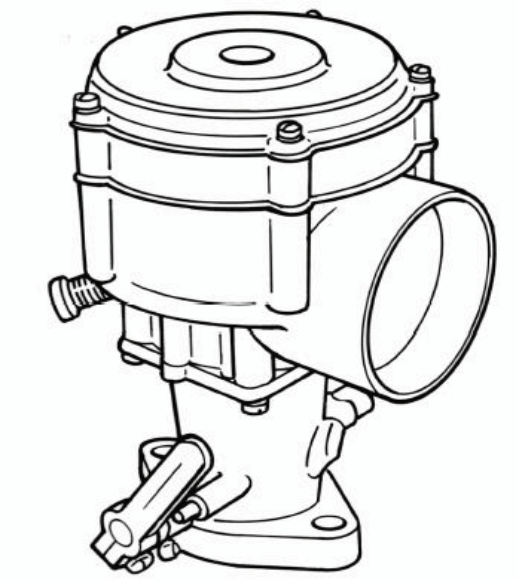

DESCRIPTION

The Model 210 can be used with LPG Vapor or Natural Gas for applications with air flow requirements up to 345 CFM (162.8 L/s). The 210 carburetor/mixer is designed primarily for one and two cylinder engines where severe intake manifold pressure pulsations are present. However, its use is not limited to these applications. Improved mixture control and air-gas valve durability can also benefit other applications in tuned intake systems where resonant pressure changes could adversely affect a standard 200/225 model assembly.

Note that the diaphragm is different from the standard 200/225 model and may have to be ordered as a separate component part (see dashpot assembly on pg 83).

SPECIFICATIONS

Fuel Type	LPG Vapor or Natural Gas
Inlet Pressure	-1.5” w.c. (-0.37 kPa)
Operating Temperature	-40°F to +250°F (-40°C to +121°C)
Mounting Position	Vertical
Diaphragm	Hydrin (Standard), Silicone (Optional)
HP/kW	215 hp (160.3 kW) @ 345 CFM (162.8 L/s) with 2.0” in Hg manifold depression

DIMENSIONS

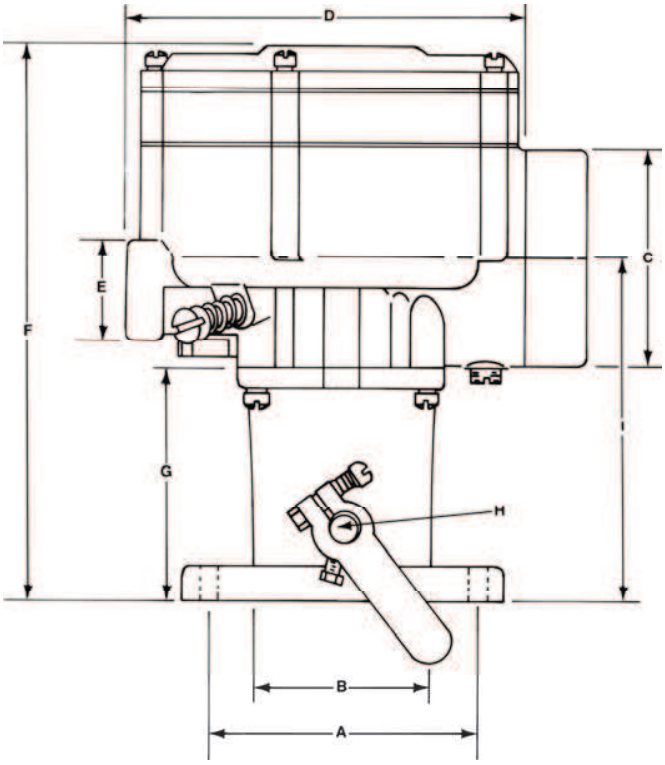

STD. CARB.	MIXER	THRTL. BODY	SAE FLANGE	A CTR. TO CTR. BOLT SPACING	B BORE	C MIXER AIR HORN DIA.	D OVRAL. WIDTH	E NPT INLET	F OVRAL. HEIGHT	G THRTL. BODY HEIGHT	H THRTL. SHAFT DIA.	I FLANG. TO CTR. OF AIR HORN
210-4	210M-1	AT2-5	1-3/4"	84.1 mm (3.31")	49.2 mm (1.94")	66.7 mm (2.63")	165 mm (6.50")	3/4"	206 mm (8.13")	82.6m (3.250")	9.5 mm (.38")	123 mm (4.84")
210-6	210M-2	AT2-6	2"	90.5 mm (3.56")	55.6 mm (2.19")	77.8 mm (3.06")	165 mm (6.50")	3/4"	206 mm (8.13")	82.6m (3.25")	9.5 mm (.38")	123 mm (4.84")
210-8	210M-2	AT2-5	1-3/4"	84.1 mm (3.31")	49.2 mm (1.94")	77.8 mm (3.06")	165 mm (6.50")	3/4"	206 mm (8.13")	82.6m (3.25")	9.5 mm (.38")	123 mm (4.84")
210-8-2	210M-2-2	AT2-5	1-3/4"	84.1 mm (3.31")	49.2 mm (1.94")	77.8 mm (3.06")	165 mm (6.50")	3/4"	206 mm (8.13")	82.6m (3.25")	9.5 mm (.38")	123 mm (4.84")

 © IMPCO TECHNOLOGIES, INC.

MODEL 210 CARBURETOR

CARBURETORS & MIXERS

COMPONENTS

ITEM #	PART #	DESCRIPTION
1	S1-3	Screw, 10-24 x 5/8" SEMS (2)
2	S1-41	Screw, 10-24 x 1-3/8" SEMS (3)
3	NSS	Cover
4	S2-17	Spring, air valve
5	S1-12	Screw, 8-32 x 5/16" SEMS (4)
6	P2-13	Plate, backup
7	D1-12	Diaphragm
	D1-12-2	Diaphragm, silicone
8	NSS	Plate, divider
9	G1-20	Gasket, plate to body
10	S1-12	Screw, 8-32 x 5/16" SEMS (4)
11	NSS	Spacer
12	R1-17	Ring, air valve
13	BV1-12	Valve ass'y
14	AB1-11-2	Body ass'y, 77.8 mm (3.06") Air Horn
15	G1-21	Gasket, throttle body to mixer
16	S1-19	Screw, 12-24 x 5/8" SEMS (4)
17	S2-16	Spring, idle screw
18	NSS	Idle screw
19	AS3-21	Valve & spacer ass'y
20	A210-DP	Dash Pot Ass'y
	A210-DP-2	Dash Pot Ass'y, Silicone
21	NSS	Plug, 1/8 NPT
22	NSS	(Refer to Throttle body charts)
23	NSS	Pin, throttle stop (5)
24	S5-2	Throttle shaft, 7.9 mm (0.31") dia.
	S5-3	Throttle shaft, 9.5 mm (0.38") dia.
25	NSS	Butterfly, 38.1 mm (1.50")
	NSS	Butterfly, 44.5 mm (1.75")
	NSS	Butterfly, 50.8 mm (2.00")
26	S1-12	Screw, 8-32 x 5/16" SEMS (2)
27	B2-12	Bearing, Oilite, 7.9 mm (0.31") I.D. (2)
	B2-13	Bearing, Oilite, 9.5 mm (0.38") I.D. (2)
28	B2-7	Bearing, needle, 7.9 mm (0.31") I.D. (2), opt.
29	S3-9	Seal, 7.9 mm (0.31") shaft (2)
	S3-11	Seal, 9.5 mm (0.38") shaft (2)
30	S3-20	Seal, internal, 9.5 mm (0.38") I.D., optional
31	R1-9	Ring, seal retainer, 7.9 mm (0.31") shaft (2)
	R1-8	Ring, seal retainer, 9.5 mm (0.38") shaft (2)
32	AL1-8-2	Throttle stop ass'y, 7.9 mm (0.31")
	AL1-10	Throttle stop ass'y, 9.5 mm (0.38")
33	NSS	Throttle stop lever
34	S2-15	Spring, stop screw
35	S1-21	Stop screw, 10-32 x 3/4"
36	S1-18	Pin screw, throttle stop
37	AL1-7-1	Throttle lever, w/ S1-17, L1-7-1
	AL1-9-1	Throttle lever, w/ S1-26, L1-9-1
	AL1-9-1A	Throttle Lever 58.7 mm (2.31") long, 0.562"mtg ID
38	NSS	Throttle lever
39	NSS	Screw, 10-24 x 5/8"
	NSS	Screw, 12-24 x 5/8"
40	G1-19	Gasket, 38.1 mm (1.50") flange
	G1-23	Gasket, 44.5 mm (1.75") flange
	G1-24	Gasket, 50.8 mm (2.00") flange

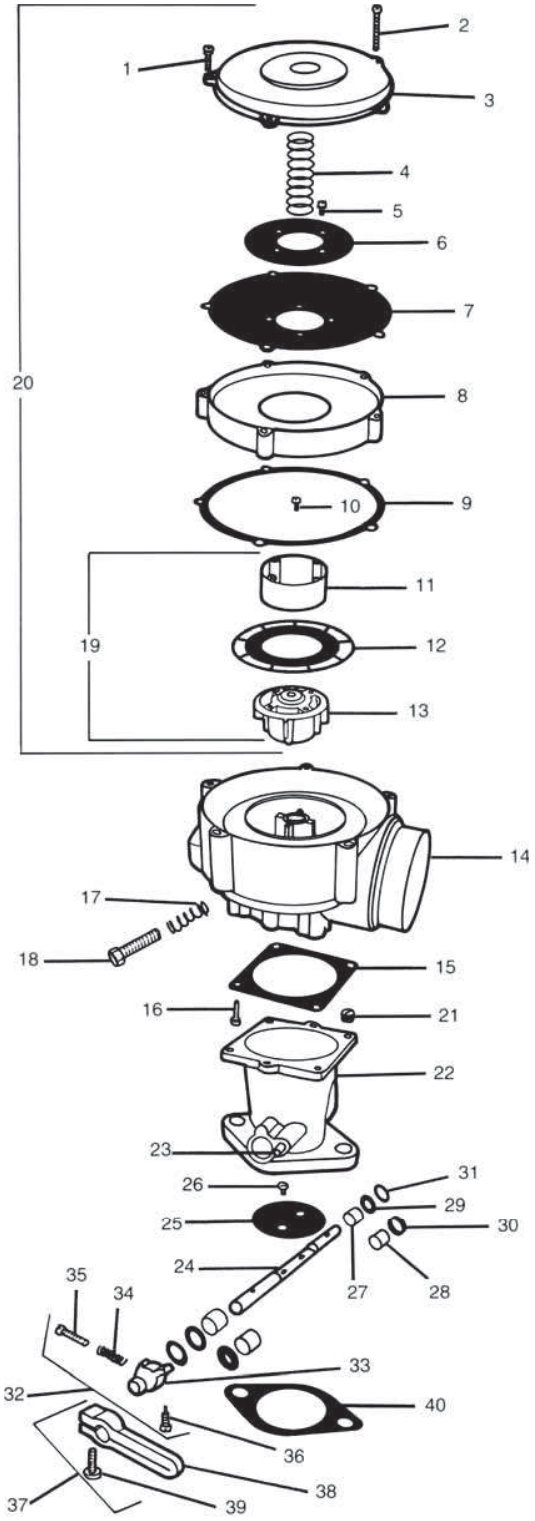

ASSEMBLIES & ACCESSORIES

MIXERS

PART #	DESCRIPTION
210M-2	77.8 mm (3.06") Air Horn
210M-2-2	77.8 mm (3.06") Air Horn, w/ silicone

THROTTLE BODIES

PART #	DESCRIPTION
AT2-4-2	Standard, 38.1 mm (1.50") flange, 7.9 mm
AT2-5	Standard, 44.5 mm (1.75") flange, 9.5 mm
AT2-6	Standard, 50.8 mm (2.00") flange, 9.5 mm
AT2-6-3	50.8 mm (2.00") flange, 9.5 mm (0.38") shaft
AT2-11-1	Standard, 31.8 mm (1.25") flange, 11.1 mm
AT2-12	Standard, 38.1 mm (1.50") flange, 11.1
AT2-13-1	Standard, Holley, 11.1 mm (0.44") shaft

THROTTLE SHAFTS

PART #	DESCRIPTION
S5-2	7.9 mm (0.31") dia., 127 mm (5.00") long,
S5-3	9.5 mm (0.38") dia., 138 mm (5.44") long,
S5-7	7.9 mm (0.31") dia., 133 mm (5.25") long
S5-11	7.9 mm (0.31") dia., 156 mm (6.13") long

DASHPOT ASSEMBLIES

PART #	DESCRIPTION
A210-DP	For Model 210 Mixer
A210-DP-2	For Model 210 Mixer, w/silicone diaphram

SPACERS

PART #	DESCRIPTION
AS3-10	12.7 mm (0.500") tall, used to rotate mixer Air
AS3-43	4.8 mm (0.188") tall, used to rotate mixer Air
AS3-45	Spacer ass'y, 20.6 mm (0.81") high

GASKETS

PART #	DESCRIPTION
G1-47	Gasket, Flange 2B Holley T2-13

LEVERS

PART #	DESCRIPTION
AL1-7-1	Ass'y, 44.5 mm (1.75") long (std. on AT2-3, AT2-4-1, AT2-4-3, AT2-16-1)
AL1-7-2	Ass'y, w/ 6.4 mm (0.25") ball stud, 44.5 mm (1.75") long
AL1-7-3	Ass'y, 33.3 mm (1.31") long
AL1-7-4	Ass'y, w/ swivel, 44.5 mm (1.75") long
AL1-8-2	Stop ass'y, 7.9 mm (0.31") mounting I.D., 19.1 mm (0.75") long
AL1-9-1	58.7 mm (2.31") long (standard on AT2-5, AT2-6)
AL1-9-1A	58.7 mm (2.31") long, 0.562"mounting ID
AL1-10	Lever stop ass'y, 9.5 mm (0.38") mounting I.D., 22.2 mm (0.88") long, standard on AT2-5, AT2-6
AL1-33	Ass'y, shaft clamp, 7.9 mm (0.31") mounting I.D., 49.2 mm (1.94") long

NOTES:
AL1-7-1 through AL1-7-4 levers used w/ AL1-8 lever stop.
AL1-9 levers used w/ AL1-10 lever stop.
See Small Parts & Accessories section of catalog for other optional levers.

ADAPTERS

PART #	DESCRIPTION
A3-28	200M to 3-1/16" hose
A3-30	200M to 2-5/8" hose
AA3-19	225M to Holley 2B throttle body
AA3-32-2	200M to CA100 throttle body
AA3-47-2	200M to CA425 throttle body
AA3-48-2	200M to CA425 hose elbow

RETURN SPRINGS

PART #	DESCRIPTION
AS2-50-2	7.9 mm (0.31") throttle return
AS2-50-3	9.5 mm (0.38") throttle return

 © IMPCO TECHNOLOGIES, INC.

MODEL 225 CARBURETOR

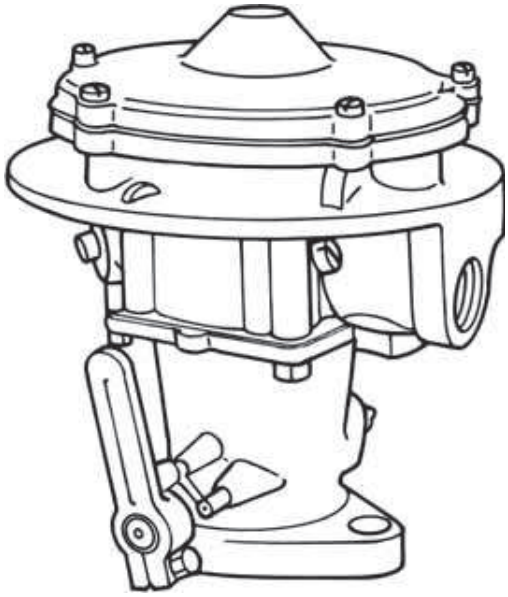

DESCRIPTION

The Model 225 carburetor is a single-diaphragm air valve carburetor/mixer. It offers a down-draft air inlet that can be used for remote air filtration or open-element type air filters. This unit is available for LPG Vapor or Natural Gas applications with air flow requirements up to 380 CFM (179.3 L/s).

The Model 225 is also available for feedback applications with the FB!'designation.

Two separate air valve vacuum supplies are available with this mixer. Additional low speed mixture control can be obtained to lean air/fuel mixtures with optional ring spacers/shims. Check the Accessories section for more information.

SPECIFICATIONS

Fuel Type	LPG Vapor or Natural Gas
Inlet Pressure	-1.5! w.c. (-0.37 kPa)
Operating Temperature Range	-40°F to +250°F (-40°C to +121°C)
Mounting Position	Vertical
Diaphragm Material	Hydrin (Standard), Silicone (Optional)
HP/kW	237 hp (177 kW) @ 380 CFM (179.3 L/s) and 2.0#in Hg manifold depression

DIMENSIONS

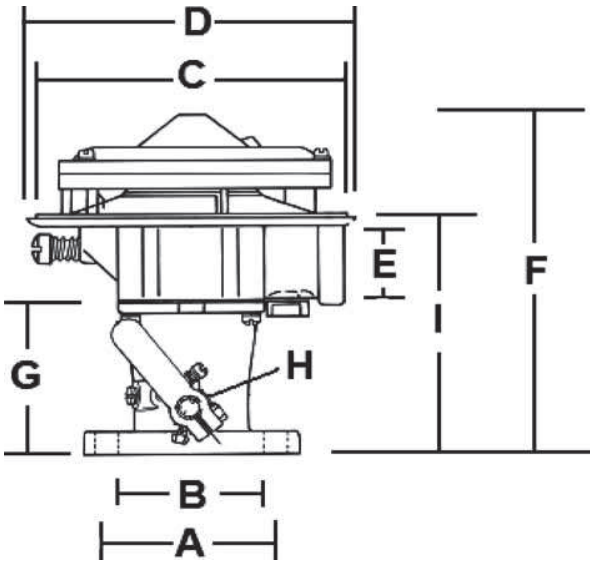

			A	B	C	D	E	F	G	H	I
CARB	THRTL. BODY	SAE FLANGE	CTR. TO CTR. BOLT SPACING	BORE	MIXER AIR HORN DIA.	OVRAL. WIDTH	NPT INLET	OVRAL. HEIGHT	THRTL. BODY HEIGHT	THRTL. SHAFT DIA.	FLANG. TO CTR. OF AIR HORN
225-94	AT2-6	2"	60.45mm (2.38")	55.6mm (2.188")	N/A	159 mm (6.250")	3/4"	184 mm (7.250")	69.9mm (2.750")	7.9 mm (.313")	114 mm (4.500")
225-94-2	AT2-6	2"	60.45mm (2.38")	55.6mm (2.188")	148 mm (1.688")	159 mm (6.250")	3/4"	191 mm (7.500")	82.6m (3.250")	9.5 mm (.375")	127 mm (5.000")
CA225-94	AT2-6	2"	60.45mm (2.38")	55.6mm (2.188")	148 mm (1.688")	159 mm (6.250")	3/4"	191 mm (7.500")	82.6m (3.250")	9.5 mm (.375")	127 mm (5.000")

 © IMPCO TECHNOLOGIES, INC.

MODEL 225 CARBURETOR

CARBURETORS & MIXERS

COMPONENTS

ITEM #	PART #	DESCRIPTION
1	G1-73	Gasket, mixer to Air Horn
2	S1-47	Screw, 1/4" -20 x 1" SEMS
3	S1-3	Screw, 10 -24 x 5/8" SEMS (5)
4	NSS	Cover, air valve
5	S2-17	Spring, air valve
6	S1-12	Screw, 8-32 x 5/16" SEMS (4)
7	P2-21	Plate, backup
8	D1-16-1	Diaphragm
	D1-16-2	Diaphragm, Silicone
9	R1-17	Ring, air valve
10	BV1-12	Air-gas valve ass'y, LPG
	DV1-12	Air-gas valve ass'y, NG
11	AV1-12	Air-gas valve ass'y, complete w/ diaphragm, LPG
	CV1-12	Air-gas valve ass'y, complete w/ diaphragm, NG
12	NSS	Body ass'y
13	S2-16	Spring, idle screw
14	NSS	Idle screw
15	S1-69	Screw, 1/4" -28 x 5/16" (3)
16	NSS	Plug, 1/8 NPT, brass
17	G1-21	Gasket, throttle body to mixer
18	S1-19	Screw, 12-24 x 5/8" SEMS

NSS = Not Serviced Separately

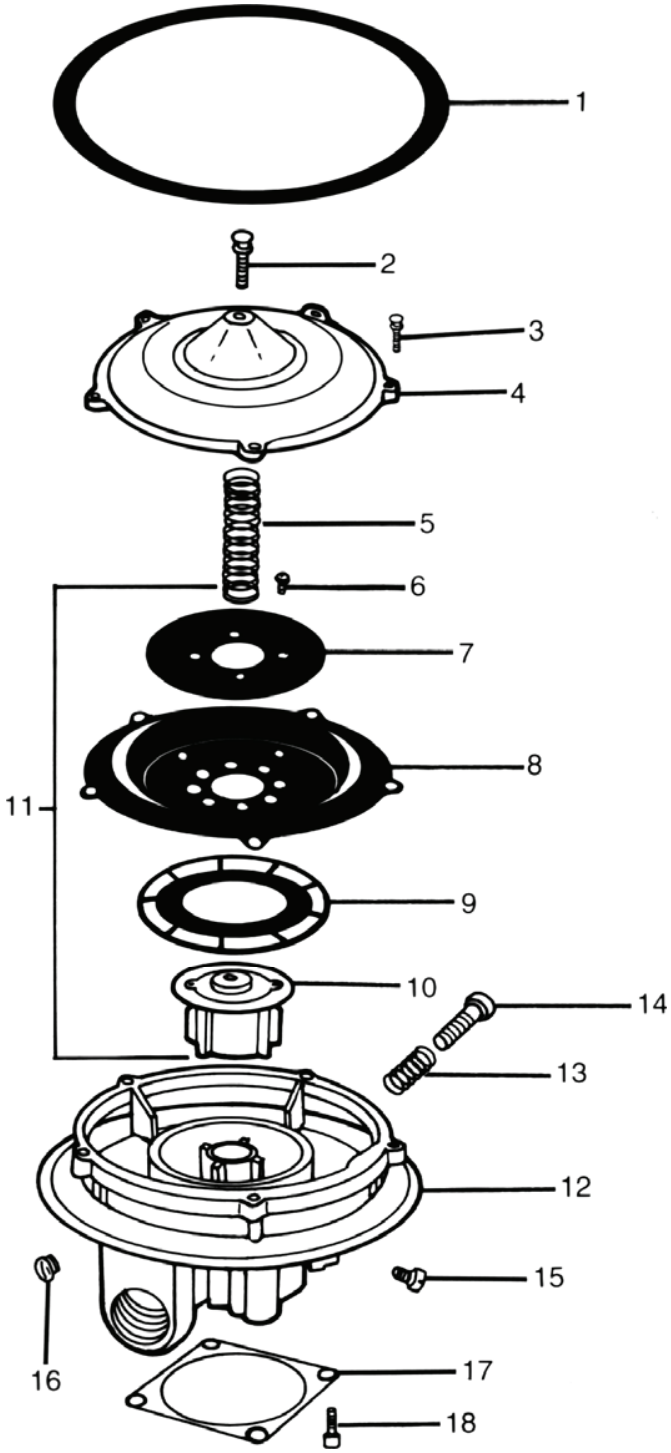

ASSEMBLIES & ACCESSORIES

MIXERS

PART #	DESCRIPTION
225M-2	For NG, w/silicone diaphragm
FB225M-2	For feedback, w/ silicone diaphragm
FB225M-F6T49	Mixer assembly, Model 225 Tamper Rest For Ford QVM
CA225M	For LPG
CA225M-2	Use CA225M-3-2 Instead
FB225M-2TP	Feedback Mix w/Sil Diaphragm Temp Resistant

THROTTLE BODIES (ONE BARREL)

PART #	DESCRIPTION
AT2-4-2	Standard, 38.1 mm (1.50") flange, 7.9 mm (0.31") shaft dia.
AT2-5	Standard, 44.5 mm (1.75") flange, 9.5 mm (0.38") shaft dia.
AT2-6	Standard, 50.8 mm (2.00") flange, 9.5 mm (0.38") shaft dia., center bore
AT2-6-3	50.8 mm (2.00") flange, 9.5 mm (0.38") shaft dia., center bore, w/ needle bearings & internal seal

* All throttle bodies are offset 8.8 mm (0.031") unless otherwise noted.

THROTTLE BODIES (TWO BARREL)

PART #	DESCRIPTION
AB1-24-1	Body Assy 2B Throttle

ACCESSORIES

PART #	DESCRIPTION
VCS	Valve, Solenoid Vacuum Lift

ADAPTERS

PART #	DESCRIPTION
A2-55	Adapter, Air Cleaner Base 225M

ADAPTERS

PART #	DESCRIPTION
A2-2	Air Horn, 130 mm (5.13") dia.
A2-3	Air Horn, 66.7 mm (2.63") dia.
A2-6	Air Horn, 77.8 mm (3.06") dia.
AA3-19	200M to Holley 2B throttle body
A3-28	200M to 3-1/16" hose
A3-30	200M to 2-5/8" hose
AA3-32-2	200M to CA100 throttle body
AA3-47-2	200M to CA425 throttle body
AA3-48-2	200M to CA425 hose elbow
A3-124-2	Adapter 125 Solex TB Modified
AA2-21	Adapt Air Horn 90º by 4" to 225

 © IMPCO TECHNOLOGIES, INC.

ASSEMBLIES & ACCESSORIES (CONTINUED)

LEVERS

PART #	DESCRIPTION
AL1-7-1	Ass'y 44.5 mm (1.75") long (std. on AT2-3, AT2-4-1, AT2 4-3, AT2-16-1)
AL1-7-2	Ass'y, w/ 64 mm (0.25") ball stud, 44.5 mm (1.75") long
AL1-7-3	Ass'y 33.3 mm (1.31") long (std. on AT2-1, AT2-2, AT2-23)
AL1-7-4	Ass'y, w/ swivel, 44.5 mm (1.75") long
AL1-8-2	Stop ass'y, 7.9 mm (0.31") mounting I.D., 19.1 mm (0.75") long (std. on AT-3, AT2-4-1, AT2-4-3, AT2-16-1, AT2-23)
AL1-9-1	58.7 mm (2.31") long (standard on AT2-5, AT2-6)
AL1-9-1A	58.7 mm (2.31") long, 0.562"mounting ID
AL1-9-2	Lever 200 w/Swivel
AL1-10	Lever stop ass'y, 9.5 mm (0.38") mounting I.D., 22.2 mm (0.88") long, standard on AT2-5, AT2-6
AL1-11-1	Lever stop ass'y, 11.1 mm (0.44") mounting I.D., 25.4 mm (1.00") long, standard on AT2-11-1, AT2-12, AT2-13-1, AT2-15
AL1-12-1	77.8 mm (3.06") long
AL1-12-3	58.7 mm (2.31") long, standard on AT2-11-1, AT2-12, AT2-13-1, AT2-15
AL1-27-1	Ass'y, floating 7.9 mm (0.31") mounting I.D., 54.0 mm (2.13") long, w/ AC2-12
AL1-27-2	Ass'y, floating 7.9 mm (0.31") mounting I.D., 54.0 mm (2.13") long, w/ AC2-12, w/ swivel
AL1-33	Ass'y, shaft clamp, 7.9 mm (0.31") mounting I.D., 49.2mm (1.94") long
AL1-46	Ass'y, steel shaft clamp, 7.9 mm (0.31") mounting I.D.,47.6 mm (1.88") long

NOTES:

AL1-7-1 through AL1-7-4 levers used w/ AL1-8 lever stop.

AL1-9 levers used w/ AL1-10 lever stop.

AL1-12 levers used w/ AL1-11 lever stop.

ASSEMBLIES & ACCESSORIES (CONTINUED)

AIR-GAS VALVES

PART #	DESCRIPTION
AV1-12	Standard, w/Hydrin diaphragm
AV1-12-2	Standard, w/Silicone diaphragm
AV1-12-3	For 1 & 2 cylinder engines, w/Hydrin diaphragm & ball check ass'y
AV1-12-3-2	For 1 & 2 cylinder engines, w/Silicone diaphragm & ball check ass'y
AV1-12-6	Rich, w/Hydrin diaphragm
AV1-1245	Standard feedback, w/Hydrin diaphragm
AV1-1245-2	Standard feedback, w/Silicone diaphragm
DG-AV1-12	For digester gas (550-750 BTU), w/Hydrin diaphram
DG-AV1-12-2	For digester gas (550-750 BTU), w/Silicone diaphragm
LH-AV1-12-2	For low heat gas (750-950 BTU), w/Silicone diaphram
CV1-12	For natural gas, w/Hydrin diaphragm
AV1-12-2	For natural gas, w/Silicone diaphragm

RETURN SPRINGS

PART #	DESCRIPTION
AS2-50-2	7.9 mm (0.31") throttle return
AS2-50-3	9.5 mm (0.38") throttle return
AS2-50-4	11.1 mm (0.44") throttle return

SPACERS

PART #	DESCRIPTION
AS3-45	Spacer ass'y, 20.6 mm (0.81") high
AS3-10	12.7 mm (0.500") tall, used to rotate mixer Air Horn 90º
AS3-43	4.8 mm (0.188") tall, used to rotate mixture Air Horn 90º

RING SPACERS

PART #	DESCRIPTION
R1-30	Ring, air valve spacer, for AV1-12 (to lean mixture)

AIR CLEANERS

PART #	DESCRIPTION
AF1-17-2	Offset, 260 L/s (550 cfm), 356 mm (14.00") O.D., 106 mm (4.19") high

GASKETS

PART #	DESCRIPTION
G1-51	Gasket, H.L. Govenor for AA3-19

BEARING, T/B SHAFT

PART #	DESCRIPTION
B2-14	Bearing, T/B Shaft

 © IMPCO TECHNOLOGIES, INC.

ASSEMBLIES & ACCESSORIES (CONTINUED)

AIR-GAS VALVES

PART #	DESCRIPTION
$9	6WDQGDUG Z +\GULQ GLDS
$9	6WDQGDUG Z 6LOLFRQH G
$9	)RU F\OLQGHU HQJLQH GLDSKUDJP EDOO FKHFN
$9	)RU F\OLQGHU HQJLQH GLDSKUDJP EDOO FKHFN
$9	5LFK Z +\GULQ GLDSKUDJP
$9	6WDQGDUG IHHGEDFN Z +\
$9	6WDQGDUG IHHGEDFN Z 6L
'* $9	)RU GLJHVWHU JDV GLDSKUDP
'* $9	)RU GLJHVWHU JDV GLDSKUDJP
/+ $9	)RU ORZ KHDW JDV GLDSKUDP
&9	)RU QDWXUDO JDV Z +\GU
$9	)RU QDWXUDO JDV Z 6LOL

RETURN SPRINGS

PART #	DESCRIPTION
$6	PP WKURWWOH UH
$6	PP WKURWWOH UH
$6	PP WKURWWOH U

SPACERS

PART #	DESCRIPTION
$6	6SDFHU DVV \ PP
$6	PP WDOO XVHG $LU +RUQ |
$6	PP WDOO XVHG $LU +RUQ |

RING SPACERS

PART #	DESCRIPTION
5	5LQJ DLU YDOYH VSDFHU PL[WXUH

AIR CLEANERS

PART #	DESCRIPTION
$)	2IIVHW / V FIP 2 ' PP KLJK

GASKETS

PART #	DESCRIPTION
*	*DVNHW + / *RYHQRU IRU

BEARING, THROTTLE SHAFT

PART #	DESCRIPTION
%	%HDULQJ 7 % 6KDIW